KOLLMORGEN
Seidel

Synchronous Servomotors

Series GOLDLINE™ BH

Technical description, Installation, Commissioning

Edition 07/2000

Already published editions

Edition	Comments
09 / 98	First edition
03 / 99	Completion of the motor series
08 / 99	Motor length (with brake)
07 / 2000	BH-426-D replaced by BH-426-H

Technical changes to improve the performance of the equipment may be made without prior notice!

Printed in the Federal Republic of Germany 07/2000

Mat.No.: 91678

All rights reserved. No part of this work may be reproduced in any form (by printing, photocopying, microfilm or any other method) or stored, processed, copied or distributed by electronic means without the written permission of Seidel Corporation.

Contents

		Drawing	Page
	Contents		3
	Safety Notes		5
	Important Notes		6
	Manufacturer Declaration		7
I	**General**		
I.1	About this manual		9
I.2	Prescribed usage of the Motors		9
I.3	Design of the motors		10
I.4	General technical data		10
I.5	Standard features		11
I.5.1	Style		11
I.5.2	Shaft end, A-side		11
I.5.3	Flange		11
I.5.4	Protection class		11
I.5.5	Protective device	- E.4.929,4/09	11
I.5.6	Insulation material class		12
I.5.7	Vibration class		12
I.5.8	Connection method		12
I.5.9	Resolver		12
I.5.10	Holding brake	- A.4.031,1/35	12
I.6	Options		13
I.7	Selection criteria	- A.4.033,4/07	13
I.8	Technical data		14
I.8.1	Definitions		14
I.8.2	Technical data GOLDLINE™ BH		15
II	**Installation and commissioning**		
II.1	Important notes		17
II.2	Assembly / Wiring		18
II.2.1	Connection methods		20
II.3	Commissioning		21

Contents

		Drawing	Page
III	**Drawings**		
III.1	Motors with sockets		23
III.1.1	Dimensions GOLDLINE™ BH1xx..4xx		23
III.1.2	Radial-/axial forces at the shaft end	A.4.033.3/01, 4/05	23
III.1.3	Wiring GOLDLINE™ BH-1xx..4xx.	A.4.033.4/03	24
III.1.4	Performance curve GOLDLINE™ BH-122-A		25
III.1.5	Performance curve GOLDLINE™ BH-124-B	A.4.033.3/35, 36	25
III.1.6	Performance curve GOLDLINE™ BH-126-B		26
III.1.7	Performance curve GOLDLINE™ BH-222-B	A.4.033.3/37, 38	26
III.1.8	Performance curve GOLDLINE™ BH-224-B		27
III.1.9	Performance curve GOLDLINE™ BH-226-C	A.4.033.3/26, 39	27
III.1.10	Performance curve GOLDLINE™ BH-226-E		28
III.1.11	Performance curve GOLDLINE™ BH-422-D	A.4.033.3/40, 41	28
III.1.12	Performance curve GOLDLINE™ BH-424-B		29
III.1.13	Performance curve GOLDLINE™ BH-424-D	A.4.033.3/27, 42	29
III.1.14	Performance curve GOLDLINE™ BH-426-B		30
III.1.15	Performance curve GOLDLINE™ BH-426-H	A.4.033.3/30, 69	30
III.2	Motors with terminal box		31
III.2.1	Dimensions GOLDLINE™ BH6xx..8xx		31
III.2.2	Radial-/axial forces at the shaft end	A.4.033.3/02, 4/06	31
III.2.3	Wiring GOLDLINE™ BH-6xx..8xx.	A.4.033.4/04	32
III.2.4	Performance curve GOLDLINE™ BH-622-B		33
III.2.5	Performance curve GOLDLINE™ BH-624-C	A.4.033.3/28, 44	33
III.2.6	Performance curve GOLDLINE™ BH-624-D		34
III.2.7	Performance curve GOLDLINE™ BH-626-E	A.4.033.3/29, 34	34
III.2.8	Performance curve GOLDLINE™ BH-822-D		35
III.2.9	Performance curve GOLDLINE™ BH-824-A	A.4.033.3/45, 46	35
III.2.10	Performance curve GOLDLINE™ BH-824-D		36
III.2.11	Performance curve GOLDLINE™ BH-826-C	A.4.033.3/31, 47	36
III.2.12	Performance curve GOLDLINE™ BH-826-D		37
III.2.13	Performance curve GOLDLINE™ BH-828-B	A.4.033.3/48, 49	37
IV	**Appendix**		
IV.1	Delivery package, transport, storage, maintenance, disposal.		39
IV.2	Fault-finding		40
IV.3	Index		41

Safety Notes

- **Only properly qualified personnel are permitted to perform such tasks as transport, assembly, commissioning and maintenance. Properly qualified personnel are persons who are familiar with the transport, assembly, installation, commissioning and operation of motors, and who have the appropriate qualifications for their jobs. The qualified personnel must know and observe the following standards and regulations:**
  364 resp. CENELEC HD 384 or DIN VDE 0100
  IEC report 664 or DIN VDE 0110
  national regulations for safety and accident prevention or BVG A2
- **Read the available documentation before assembly and commissioning. Incorrect handling of the motors can result in injury and damage to persons and machinery. Keep strictly to the technical data and the information on the connection requirements (nameplate and documentation).**
- **It is vital that you ensure that the motor housing is safely earthed to the PE(protective earth) busbar in the switch cabinet. Electrical safety is impossible without a low-resistance earth connection.**
- **Do not unplug any connectors during operation. This creates the danger of death, severe injury, or extensive material damage.**
- **Power connections may be live even when the motor is not rotating. Never disconnect the power connections of the motor while the equipment is energised. This can cause with resulting injuries to persons and damage to the contacts.**
- **After disconnecting the servo amplifier from the supply voltage, wait at least five minutes before touching any components which are normally live (e.g. contacts, screw connections) or opening any connections. The capacitors in the servo amplifier can still carry a dangerous voltage up to five minutes after switching off the supply voltages. To be quite safe, measure the DC-link voltage and wait until the voltage has fallen below 40V.**
- **The surfaces of the motors can be very hot in operation, according to their protection category. The surface temperature can reach 100°C. Measure the temperature, and wait until the motor has cooled down below 40°C before touching it.**
- **Remove any fitted key (if present) from the shaft before letting the motor run independently, to avoid the dangerous results of the key being thrown out by centrifugal forces.**

Symbols used in this manual

	Danger to personnel from electricity and its effects			General warning general instructions mechanical hazard
⇒	See chapter (cross-reference)		●	Special emphasis

Important Notes

- **Servomotors are precision equipment. The flange and shaft are especially vulnerable during storage and assembly — so avoid brute force. Precision requires delicacy. It is important to use the locking thread which is provided to tighten up couplings, gear wheels or pulley wheels and warm up the drive components, where possible. Blows or the use of force will lead to damage to the bearings and the shaft.**

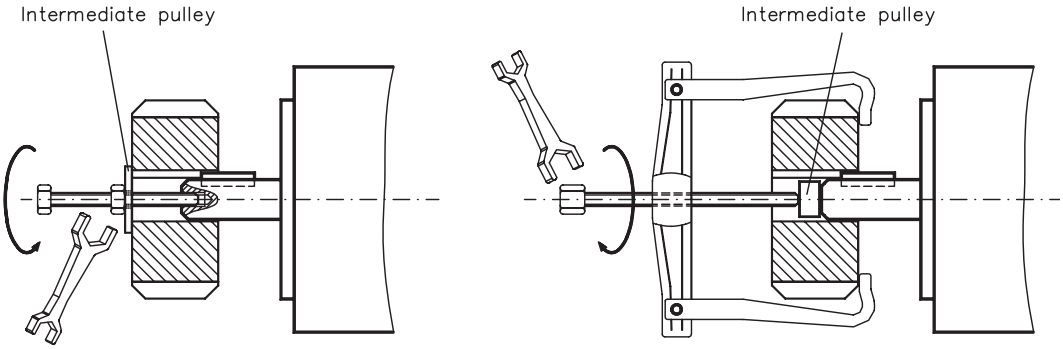

- **Wherever possible, use only backlash-free, frictionally-locking collets or couplings, e.g. from the manufacturers & Cie, Gerwah, Jacob, KTR or Ringspann. Ensure correct alignment of the couplings. A displacement will cause unacceptable vibration and the destruction of the bearings and the coupling.**
- **For toothed belts, it is vital to observe the permissible radial forces. An excessive radial load on the shaft will significantly shorten the life of the motor.**
- **Avoid axial loads on the motor shaft, as far as possible. Axial loading significantly shortens the life of the motor.**
- **In all cases, do not create a mechanically constrained motor shaft mounting by using a rigid coupling with additional external bearings (e.g. in a gearbox).**
- **For mounting style V3 (shaft end upwards), make sure that no liquid can enter the upper bearing.**
- **Take note of the no. of motor poles and the no. of resolver poles and ensure that the correct setting is made in the servo amplifier which is used. An incorrect setting can lead to the destruction of the motor, especially with small motors.**

Manufacturer Declaration

According to the EG-Machine-guideline 89/392/EWG, appendix II B

we, the company

Kollmorgen Seidel GmbH & Co. KG
Wacholderstr. 40-42
40489 Düsseldorf

declare, that the product

Motor series GOLDLINE™ BH

is intended exclusively, in its standard version, for installation in another machine and that its commissioning is forbidden until it has been established that the machine into which this product is to be installed conforms to the provisions of the EC Directive in its version 89/392/EEC.

We confirm that the above-mentioned product conforms to the following standards:

73/23/EWG	Low voltage directive
VDE 0530 / DIN 57530	Provisions for rotating machinery
DIN 42950	Design
DIN 748	Cylindrical shaft ends
DIN 6885	Fitted key
DIN 42955	True running, coaxiality and concentricity
DIN ISO 2373	Vibration class

Issued by: Management

Lawrence D. Kingsley

This Declaration does not contain any assurance of properties. The notes on safety and protection in the operating instructions must always be observed.

This page is deliberately left blank.

I General

I.1 About this manual

This manual describes the GOLDLINE™ BH series of synchronous servomotors.
The manual is divided into 4 chapters:

- Description of the motors, technical data — Chapter I
- Installation, commissioning of the motors — Chapter II
- Dimensions, Wiring diagrams and performance curves — Chapter III
- Transport, storage, maintenance, disposal of the motors — Chapter IV

This Manual is intended for the use of qualified staff with professional knowledge of electrical and mechanical engineering.

The motors are operated in drive systems together with servo amplifiers from the SERVOSTAR™ 600 family. Please observe the entire system documentation, consisting of:

— Installation and commissioning instructions for the servo amplifier
— Installation and commissioning instructions for any expansion card which is connected
— Operating manual for the Operator Software of the servo amplifier
— Technical description of the GOLDLINE™ BH series of motors

I.2 Prescribed usage of the Motors

The GOLDLINE™ BH series of synchronous servomotors is designed especially for drives for industrial robots, machine tools, textile and packing machinery and similar with high requirements for dynamics.

The user is **only** permitted to operate the motors under the ambient conditions which are defined in this documentation.

The GOLDLINE™ BH series of motors is **exclusively** intended to be driven by servo amplifiers from the SERVOSTAR™ 600 series under speed and / or torque control.

The motors are installed as components in electrical apparatus or machines and can only be commissioned and put into operation as integral components of such apparatus or machines.

The motors must never be connected directly to the mains supply.

The thermal contact which is integrated in the motor windings must be observed and evaluated.

The conformity of the servo-system to the standards mentioned in the manufacturers declaration on page 7 is only guaranteed when the components (servo amplifier, motor, leads etc.) that are used have been supplied by us.

I.3 Design of the motors

Synchronous servomotors in the GOLDLINE™ BH series are brushless DC motors for demanding servo applications. When combined with our digital servo amplifiers they are especially suited for positioning tasks in industrial robots, machine tools, transfer lines etc. with high requirements for dynamics and stability.

The servomotors have permanent magnets in the rotor. The rare earth neodymium-iron -boron magnetic material is an important factor in making it possible to drive these motors in a highly dynamic fashion. A three-phase winding which is driven by the servo amplifier is integrated into the stator. The motor does not have any brushes since commutation is performed electronically by the servo amplifier.

The temperature of the winding is monitored by temperature sensors in the stator-windings and is signalled via an electrically isolated contact (normally closed).

A **resolver** is built into the motors as a feedback element. The servo amplifiers in the SERVOSTAR™ 600 series evaluate the resolver (hence rotor) position and supply sinusoidal currents to the motors.

The motors can be delivered with or without a built-in holding brake. Retrofitting of the brake is not possible.

The motors are enamelled in matt black (RAL 9005). This finish is not resistant against solvents (e.g. trichlorethylene, nitro-thinners, or similar).

I.4 General technical data

Climate category	3K3 to EN 50178
Ambient temperature (at rated values)	5...+40°C for site altitude up to 1000m amsl It is vital to consult our applications department for ambient temperatures above 40°C and encapsulated mounting of the motors.
Permissible humidity (at rated values)	85% rel. humidity, no condensation
Power derating (currents and torques)	1%/K in range 40°C..50°C up to 1000m amsl for site altitude above 1000m amsl and 40°C 6% up to 2000m amsl 17% up to 3000m amsl 30% up to 4000m amsl 55% up to 5000m amsl No derating for altitudes above 1000m amsl with temperature reduction of 10K / 1000m
Max. permissible flange temperature	65°C ± 10% at rated values
Ball-bearing life	≥ 20.000 operating hours
Technical data	⇒ I.8
Storage data	⇒ IV.1

I.5 Standard features

I.5.1 Style

The basic style for the GOLDLINE™ BH synchronous motors is style IM B5 according to DIN42950. The permitted mounting positions may be read from the technical data of the motor series.

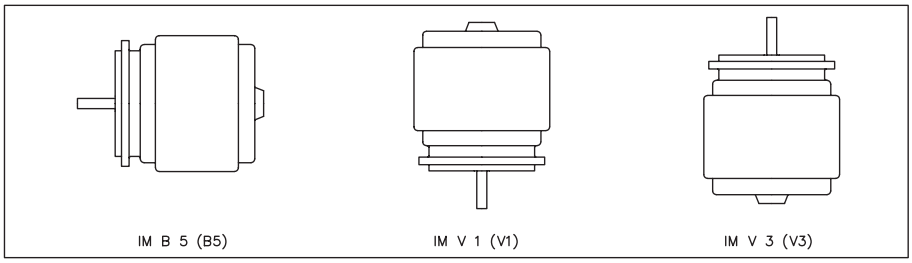

I.5.2 Shaft end, A-side

Power transmission is made through the cylindrical shaft end A (fit k6) to DIN 748, with a locking thread and with a fitted keyway according to DIN6885, shape A.

If the motors drive via pinions or toothed belts, then high radial forces will occur. The permissible values at the end of the shaft may be read from the diagram in chapter III.1.2 and III.2.2. The maximum values at rated speed you will find at the technical data. Power take-off from the middle of the free end of the shaft allows a 10% increase in F_R.

The curves are based on a bearing life of 20.000 operating hours.

The axial force F_A must not exceed F_R/3.

Double-coned collets have proved to be ideal zero-backlash coupling devices, combined, if required, with metal bellows couplings.

I.5.3 Flange

Flange dimensions to IEC standard, fit j6, accuracy according to DIN 42955.
Tolerance class : **N**

I.5.4 Protection class

Standard version	IP65
Standard shaft bushing	IP64
Shaft bushing with shaft-sealing ring (Option -J-)	IP65

I.5.5 Protective device

The standard version of each motor is fitted with a thermostat (electrically isolated, normally closed). You will find the switching point at the technical data. The thermostat does **not** provide any protection against short, heavy overloading. Provided that our preassembled resolver cable is used, the thermostat contact is integrated into the monitoring system of the digital servo amplifier SERVOSTAR™ 600.
The flange temperature must not exceed 65°C in rated operation.

I.5.6 Insulation material class

You will find the insulation material class according to DIN 57530 at the technical data.

I.5.7 Vibration class

The motors are made to vibration class N according to DIN ISO 2373 .

I.5.8 Connection method

Motor series	Resolver	Power
BH-1xx-x...4xx-x	connector	connector
BH-6xx-x...8xx-x	connector	terminal box

The mating connectors are not part of the delivery package. We can supply preassembled resolver and power leads (⇒ II.2.1).

I.5.9 Resolver

The motors are equipped with two-pole hollow-shaft resolvers.

I.5.10 Holding brake

The motors are optionally available with a holding brake mounted.
Type designation : BH-xxx-x-G
A permanent magnet brake (24V DC) is integrated into the G-motors. When this brake is de-energized it blocks the rotor. **The holding brakes are designed as standstill brakes** and are not suited for repeated operational braking. If the brake is released then the rotor can be moved without a remanent torque, the operation is not free from backlash! The motor length increases when a holding brake is mounted.

The holding brake can be controlled directly by SERVOSTAR™ 600-servo amplifier (no personal safety !), the winding is suppressed in the servo amplifier — additional circuitry is not required.

If the holding brake is not controlled directly by the servo amplifier, an additional wiring (e.g. varistor) is required. Consult our applications department beforehand.

A personal safe operation of the holding brake requires an additional contact (normally opened) in the braking circuit and an anti-surge-device (e.g. Varistor) for the brake.

Wiring example for SERVOSTAR™ 600:

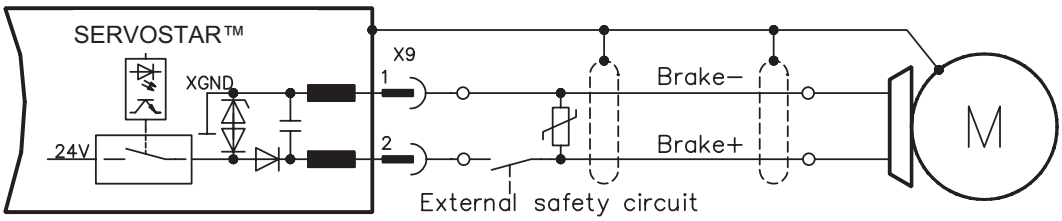

I.6 Options

-J- Radial shaft-sealing rings:
A radial shaft-sealing ring can be supplied at extra charge to seal against oil mist and oil spray. This increases the protection rating of the shaft bushing to IP65. The sealing ring is not suitable for dry running.

-426- encoder adaptor for ROD426/ROQ425 with coupling (6mm shaft diameter) and eccentric washers

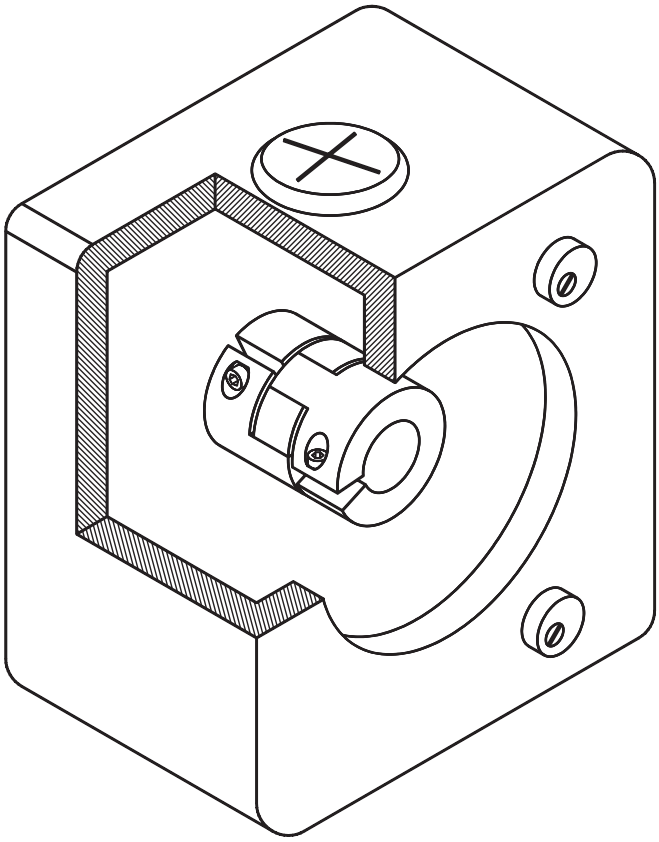

I.7 Selection criteria

The three-phase servomotors are designed to operate with Seidel servo amplifiers from the SERVOSTAR™ 600 series. Together, both units form a closed speed or torque control loop.

The most important selection criteria are:

—	**Standstill torque**	M_0	**[Nm]**
—	**Rated speed**	n_n	**[min^{-1}]**
—	**Moment of inertia of motor and load**	**J**	**[kgcm^2]**
—	**Effective torque (calculated)**	M_{rms}	**[Nm]**

When calculating the motors and servo amplifiers which are required, take account of the static load **and** the dynamic load (acceleration/braking). Collected formulae and examples of the calculations are available from our applications department.

I.8 Technical data

I.8.1 Definitions

Standstill torque M_0 [Nm]
The standstill torque can be maintained indefinitely at a speed n=0 min^{-1} and rated ambient conditions.

Rated torque M_n [Nm]
The rated torque is produced when the motor is drawing the rated current at the rated speed. The rated torque can be produced indefinitely at the rated speed in continuous operation (S1).

Standstill I_{0rms} [A]
The standstill current is the effective sinusoidal current which the motor draws during standstill to produce the standstill torque.

Rated current I_{nrms} [A]
The rated current is the effective sinusoidal current which the motor draws at the rated speed in order to produce the rated torque.

Peak current (pulse current) I_{0max} [A]
The peak current (effective sinusoidal value) should not exceed 3.5-times the rated current. The actual value is determined by the peak current of the servo amplifier which is used.

Torque constant K_{Trms} [Nm/A]
The torque constant defines how much torque in Nm is produced by the motor with 1A r.m.s. current. The relationship is $M=I \times K_T$

Voltage constant K_{Erms} [V/1000min^{-1}]
The voltage constant defines the induced motor EMF, as an rms value between two terminals, per 1000 r.p.m.

Rotor moment of inertia J [kgcm²]
The constant J is a measure of the acceleration capability of the motor. For instance, at I_0 the acceleration time t_b from 0 to 3000 r.p.m. is given as:

$$t_b\,[s] = \frac{3000\ x\ 2\pi\ x\ m^2}{M_0\ x\ 60s\ x\ 10^4\ x\ cm^2}\ xJ$$

with M_0 in Nm and J in kgcm²

Thermal time constant t_{th} [min]
The constant t_{th} defines the time for the cold motor, under a load of I_0, to heat up to an overtemperature of 0.63 x 115 Kelvin. This temperature rise happens in a much shorter time when the motor is loaded with the rated current.

Release delay time t_{BRH} [ms] / Application delay time t_{BRL} [ms] of the brake
These constants define the response times of the holding brake when operated with the rated voltage from the SERVOSTAR™ 600 servo amplifier.

I.8.2 Technical data GOLDLINE™ BH

Data	Sym	Dim	GOLDLINE™ BH-122-A	GOLDLINE™ BH-124-B	GOLDLINE™ BH-126-B	GOLDLINE™ BH-222-B	GOLDLINE™ BH-224-B	GOLDLINE™ BH-226-C	GOLDLINE™ BH-226-E	GOLDLINE™ BH-422-D	GOLDLINE™ BH-424-B	GOLDLINE™ BH-424-D	GOLDLINE™ BH-426-B	GOLDLINE™ BH-426-H
Standstill torque	**M_0**	**Nm**	**0,7**	**1,3**	**1,9**	**2,1**	**3,8**	**5,5**	**5,6**	**5,8**	**11,3**	**11,1**	**15,8**	**15,7**
Standstill current	**I_{0rms}**	**A**	**1,0**	**1,8**	**2,6**	**1,3**	**2,2**	**4,4**	**3,0**	**4,0**	**4,2**	**6,3**	**8,1**	**9,1**
Rated speed at 400V	n_n	min^{-1}	6000	6000	6000	3000	3000	4000	2500	3600	2000	3000	2500	3000
Torque constant	K_{Trms}	Nm/A	0,70	0,74	0,74	1,62	1,70	1,25	1,86	1,45	2,69	1,75	1,95	1,73
Voltage constant	K_{Erms}	mV/min^{-1}	42,6	44,9	44,9	98	103	75,4	112	87,4	162	106	118	105
Mains voltage	U_n	V	400 / 480											
Rated torque at 400V	M_n	Nm	0,6	1,2	1,7	2,0	3,5	4,8	3,9	5,2	10,8	10	14,4	13
Rated current	I_n	A	0,85	1,6	2,3	1,2	2	3,8	2,6	3,4	4	5,6	7,2	7,5
Rated power	P_n	kW	0,38	0,76	1,1	0,63	1,1	2,0	1,3	1,9	2,2	3,1	4,4	4,7
Peak current	I_{0max}	A	3,6	6,3	9	4,6	8	16	11,5	14,4	14	22,5	27	29,5
Motor pole no	p_{Mot}	-	4											
Resolver pole no.	p_{Res}	-	2											
Winding resistance Phase-Phase	R_{20}	Ω	34,9	12,4	8,2	35,4	12,5	3,9	8,5	6,1	6,3	3,3	2,1	1,9
Winding inductance Phase-Phase	L	mH	120	58	38	272	152	44	92	89	134	60	48	39,7
Insulation class	-	-	H (DIN 57530)											
Switch point thermal contact	-	°C	170±5											
Mechanics (Dimensions ⇒ III.1.1)														
Design	-	-	IM B5(V1,V3), (DIN 42950)											
Rotor moment of inertia	J	kgcm²	0,3	0,46	0,76	1,0	1,7	2,5	2,5	3,2	7	6,6	10	10
Static friction torque	M_R	Nm	0,04	0,05	0,07	0,08	0,09	0,1	0,1	0,24	0,26	0,26	0,29	0,29
Radial load permitted at shaft end with n_n	F_R	N	200			260	280		300	400	500	400	500	400
Axial load permitted at shaft end with n_n	F_A	N	70			100				170				
Tolerance class flange	-	-	N (DIN 42955)											
Vibration class	-	-	N (DIN ISO2373)											
Thermal time constant	t_{TH}	min	10	11	12	18	20	20	21	22	25	25	28	28
Weight standard	G	kg	2,5	3,2	3,9	4,1	6,2	7,6	7,6	8,4	12,5	12,5	16	16
Order number standard	-	-	91452	91454	91456	91458	91460	89130	91463	91465	90684	91468	89128	91472
Connectors														
EMV-RES connector	-	-	Socket, 12 poles											
RES cable, shielded	-	mm²	4 x 2 x 0,25											
Power connection	-	-	Socket, 8 poles											
Motor cable, shielded	-	mm²	4x1...4x1,5 (+ 2x0,75 for brake)											
Holding brake														
Holding torque	M_{BR}	Nm	2,3			6				8				
Operating voltage	U_{BR}	V=	24											
electrical power	P_{BR}	W	20			30				22				
Moment of inertia	J_{BR}	kgcm²	0,02			0,02				0,59				
Release delay time	t_{BRH}	ms	200			250				250				
Application delay time	t_{BRL}	ms	100			100				100				
Weight of the brake	G_{BR}	kg	1,1			1,6				2,4				
Order number with -G-	-	-	91453	91455	91457	91459	91461	91462	91464	91466	91467	91469	91471	91473
max. ∅ of the motor cable	-	mm	13,5											

Data	Sym	Dim	GOLDLINE™ BH-622-B	GOLDLINE™ BH-624-D	GOLDLINE™ BH-624-C	GOLDLINE™ BH-626-E	GOLDLINE™ BH-822-D	GOLDLINE™ BH-824-D	GOLDLINE™ BH-824-A	GOLDLINE™ BH-826-C	GOLDLINE™ BH-826-D	GOLDLINE™ BH-828-B
Standstill torque	**M_0**	**Nm**	**14,9**	**25,8**	**27,6**	**35,4**	**34,7**	**66**	**66**	**93**	**93**	**124**
Standstill current	**I_{0rms}**	**A**	**8,4**	**12,4**	**19**	**20**	**18,1**	**32**	**37**	**39,7**	**52**	**50**
Rated speed at 400V	n_n	min^{-1}	3000	2500	3600	3000	3000	2500	3000	2500	3000	2500
Torque constant	K_{Trms}	Nm/A	1,77	2,07	1,48	1,8	1,92	2,08	1,8	2,34	1,8	2,5
Voltage constant	K_{Erms}	mV/min^{-1}	107	125	90	108	116	126	108	141	103	150
Mains voltage	U_n	V	400 / 480									
Rated torque at 400V	M_n	Nm	12,7	23,7	18,4	24,9	30	48,1	43,9	55,1	47,5	75,7
Rated current	I_n	A	6,7	11,1	12,2	14,4	15,1	23	22,5	20,3	24	35
Rated power	P_n	kW	3,7	7,2	7,5	8,2	9,1	12,3	12	12,4	12,8	17,2
Peak current	I_{0max}	A	37,7	44	62	74	66,8	118	137	145	200	175
Motor pole no.	p_{Mot}	-	6									
Resolver pole no.	p_{Res}	-	2									
Winding resistance Phase-Phase	R_{20}	Ω	1,91	1,01	0,53	0,43	0,583	0,233	0,155	0,167	0,088	0,112
Winding inductance Phase-Phase	L	mH	32	23	10	10,7	20,8	11	7,3	9	4,7	4,7
Insulation class	-	-	H (DIN 57530)									
Switch point thermal contact	-	°C	170±5									
Mechanics (Dimensions ⇒ III.2.1)												
Design	-	-	IM B5(V1,V3), (DIN 42950)									
Rotor moment of inertia	J	kgcm²	10,3	20,3	20,3	30,4	48,8	84	84	126	126	168
Static friction torque	M_R	Nm	0,49	0,52	0,52	0,9	0,64	0,9	0,9	1,38	1,4	1,8
Radial load permitted at shaft end with n_n	F_R	N	650				870					1050
Axial load permitted at shaft end with n_n	F_A	N	210				290				330	
Tolerance class flange	-	-	N (DIN 42955)									
Vibration class	-	-	N (DIN ISO2373)									
Thermal time constant	t_{TH}	min	28	33	33	38	40	48	48	55	55	57
Weight standard	G	kg	16,8	23	23	30	35,8	51	51	67	67	82
Order number standard	-	-	91474	90685	90299	90301	91479	90525	90687	91483	90688	90689
Connectors												
EMV-RES connector	-	-	Socket, 12 poles									
RES cable, shielded	-	mm²	4 x 2 x 0,25									
Power connection	-	-	Screw M4, in terminal box				Screw M5, in terminal box					
Motor cable, shielded	-	mm²	4x2,5 (+ 2x1 for brake)					4x10		4x16		
Holding brake												
Holding torque	M_{BR}	Nm	48									
Operating voltage	U_{BR}	V=										
electrical power	P_{BR}	W	30									
Moment of inertia	J_{BR}	kgcm²	1,27									
Release delay time	t_{BRH}	ms	250									
Application delay time	t_{BRL}	ms	100									
Weight of the brake	G_{BR}	kg	4,4				4,7					
Order number with -G-	-	-	91475	91477	91476	91478	91480	91482	91481	91484	91485	91486
max. ∅ of the motor cable	-	mm	16,5 / PG21					35 / PG36				

II Installation and commissioning

II.1 Important notes

- Check that the servo-amplifer and motor match each other. Compare the rated voltage and rated current of the unit. Carry out the wiring according to the wiring diagram in the Installation and Commissioning Instructions for the servo amplifier. The connections to the motor are shown in the chapters III.1.3 and III.2.3. Notes on the connection methods can be found in chapter II.2.1 .
- Ensure that there is proper earthing of the servo amplifier and the motor.
- Route the power and control cables as separately as possible from one another (separation > 20 cm). This will improve the immunity of the system to electromagnetic interference. If a motor power cable is used which includes integral brake control leads, then these brake control leads must be shielded. The shielding must be connected at both ends (see under Installation Instructions for the servo amplifier).
- Install all cables carrying a heavy current with an adequate cross-section, as per EN 60204. The recommended cross-section can be found in the Technical data.

Caution !
If a servo amplifier of the series SERVOSTAR™ 600 is used and the motor cable exceeds 25m, a boxed choke (type 3YL-20, manufactured by Seidel) and motor leads with the following diameters must be used

servo amplifier	chokebox	Max. cable diameter
SERVOSTAR™ 601...606	3YL-20	4 x 1mm²
SERVOSTAR™ 610	3YL-20	4 x 1,5mm²
SERVOSTAR™ 614	3YL-20	4 x 2,5 mm²
SERVOSTAR™ 620	3YL-20	4 x 2,5 mm²
SERVOSTAR™ 640	inapplicable	4 x 10 mm²
SERVOSTAR™ 670	inapplicable	4 x 16 mm²

- Connect up all shielding via a wide surface-area contact (low impedance) and metallized connector housings or EMC-PG glands.
- Check the compliance to the permitted radial and axial forces F_R and F_A.
  When you use a toothed belt drive, the **minimal** permitted diameter of the pinion e.g. follows from the equation: $d_{min} \geq M_0 / F_R \times 2$.
- Ensure that there is adequate heat transfer in the surroundings and the motor flange, so that the maximum permissible flange temperature of 65°C is not exceeded in S1 operation.

Caution!
Never undo the electrical connections to the motor while it is energised. A dangerous voltage, resulting from residual charge, can be still present on the capacitors up to 300 seconds after switch-off of the mains supply.
Measure the DC-link voltage and wait until it has fallen below 40V. Even when the motor is not rotating, control and power leads may be live.

II.2 Assembly / Wiring

Only qualified staff with knowledge of mechanical engineering are permitted to assemble the motor.

Only staff qualified and trained in electrical engineering are allowed to wire up the motor.

The procedure is described as an example. A different method may be appropriate or necessary, depending on the application of the equipment.

Warning !
Protect the motor from unacceptable stresses.
Take care, especially during transport and handling, that components are not bent and that insulation clearances are not altered.

Always make sure that the motors are de-energized during assembly and wiring, i.e. No voltage may be switched on for any piece of equipment which is to be connected.
Ensure that the switch cabinet remains turned off (barrier, warning signs etc.).
The individual voltages will only be turned on again during commissioning

Note !

The ground symbol , which you will find in the wiring diagrams, indicates that you must provide an electrical connection, with as large a surface area as possible, between the unit indicated and the mounting plate in the switch cabinet. This connection is to suppress HF interference and must not be confused with the PE (protective earth) symbol (protective measure to EN 60204).

To wire up the motor, use the wiring diagrams in the Installation and Commissioning Instructions of the SERVOSTAR™ 600 servo amplifier which is used.

The following notes should help you to carry out the assembly and wiring in an appropriate sequence, without overlooking anything.

Site

The site must be free of conductive and aggressive material.
For V3-mounting (shaft end upwards), make sure that no liquids can enter the bearings. If an encapsulated assembly is required, please consult our applications department beforehand.

Ventilation

Ensure an unhindered ventilation of the motors and observe the permissible ambient and flange temperatures.
For ambient temperatures above 40°C please consult our applications department beforehand.

Assembly

During assembly, take care that the motor is not overstressed when it is fixed in place.

Cable selection

Select cables according to EN 60204.
Consider chapter II.1 when cable length exceeds 25m.

Earthing Shielding

Use correct earthing and EMC-shielding according to the Installation Instructions for the servo amplifier which is used. Earth the mounting plate and motor casing. For connection methods see chapter II.2.1

Wiring

— Route power cables as separately as possible from control cables
— Connect up the resolver
— Connect the motor leads, install ring cores or motor chokes close to the servo amplifier, connect shields to shielding terminals or EMC connectors at both ends
— Connect the holding brake, if used, Connect shielding at both ends

Check

Final check of the installed wiring, according to the wiring diagram which was used

II.2.1 Connection methods

- Carry out the wiring in accordance with the valid standards and regulations.
- Only use our pre-confectioned shielded leads for the resolver and power connections.
- Connect up the shielding according to the wiring diagrams in the Installation Instructions for the servo amplifier.
- Incorrectly installed shielding inevitably leads to EMC interference.

In the table below you find all leads supplied by us. Further information referring to chemical, mechanical and electrical qualities can be received from our applications department.

Insulating material

Sheathing - PUR (Polyurethane, identification 11Y)
core insulation - PETP (Polyesteraphtalate, identification 12Y)

Capacity

Motor lead - less than 150 pF/m
Resolver lead - less than 120 pF/m

Techn. Data

— All leads are suitable for trailing.
— Technical data refer to mobile usage of leads.
Life time : 1 Million bending cycles
— The temperature range refers to the operation temperature.
— Identification : N = numbered cores
F = cores with colour code according to DIN 47100
B = cores with letter identification
( ) = shielding

Cores [mm²]	identification	Temperature-range [°C]	Cable diameter [mm]	Bending radius [mm]	Remarks
(4x1,0)	F	-30 / +80	10,5	105	Motor lead
(4x1,5)	B	-30 / +80	11,3	115	
(4x2,5)	N	-5 / +70	12,7	125	
(4x4)	N	-5 / +70	12,8	130	
(4x6)	N	-5 / +70	16,1	160	
(4x10)	N	-5 / +70	19,0	190	
(4x16)	N	-5 / +70	23,3	230	
(4x1,0+(2x0,75))	F	-30 / +80	12	120	Motor lead with integral brake control leads
(4x1,5+(2x0,75))	B	-10 / +80	12,5	125	
(4x2,5+(2x1))	B	-30 / +80	13,8	140	
(4x2x0,25)	F	-30 / +80	6,9	60	Resolver lead

II.3 Commissioning

The procedure for commissioning is described as an example. A different method may be appropriate or necessary, depending on the application of the equipment.

Only specialist personnel with extensive knowledge in the areas of electrical engineering / drive technology are allowed to commission the drive unit of servo amplifier and motor.

Caution !
Check that all live connection points (terminal boxes) are safe against accidental contact. Deadly voltages can occur, up to 900V.

Never undo the electrical connections to the motor when it is live.
The residual charge in the capacitors of the servo amplifier can produce dangerous voltages up to 300 seconds after the mains supply has been switched off.

The surface temperature of the motor can reach 100°C in operation.
Check (measure) the temperature of the motor.
Wait until the motor has cooled down below 40°C before touching it.

Make sure that, even if the drive starts to move unintentionally, no danger can result for personnel or machinery.

Remove or fix any fitted key (if present) from the shaft before letting the motor run independently, to avoid the dangerous results of the key being thrown out by centrifugal forces and injuring personnel.

- Check the assembly and orientation of the motor.
- Check the drive components (clutch, gear unit, belt pulley) for the correct seating and setting (observe the permissible radial and axial forces).
- Check the wiring and connections to the motor and the servo amplifier. Check that the earthing is correct.
- Test the function of the holding brake, if used.
  (apply 24V, the brake must be released).
- Check whether the rotor of the motor revolves freely
  (release the brake, if necessary). Listen out for grinding noises.
- Check that all the required measures against accidental contact with live and moving parts have been carried out.
- Carry out any further tests which are specifically required for your system.
- Now commission the drive according to the commissioning instructions for the servo amplifier.
- In multi-axis systems, individually commission each drive unit
  (servo amplifier + motor).

This page is deliberately left blank.

III Drawings

III.1 Motors with sockets

III.1.1 Dimensions GOLDLINE™ BH1xx..4xx

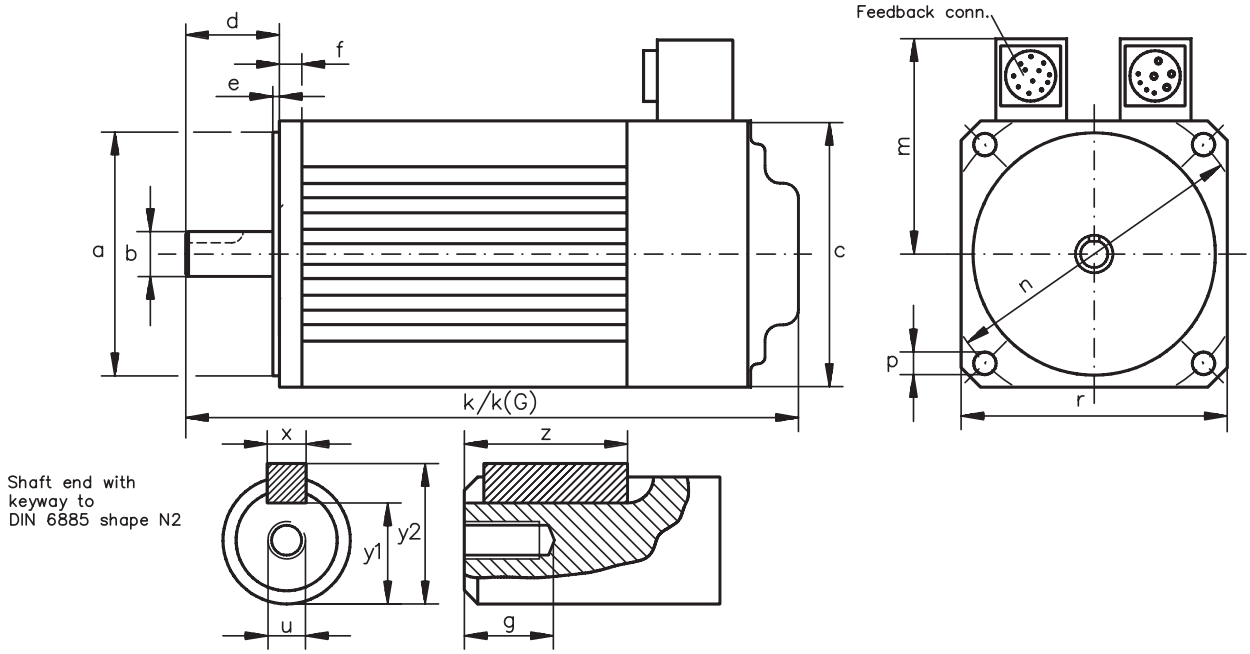

	a_{j6}	b	c	d	e	f	g	k	k(G)	m	n	p	r	u	x	y1	y2	z
	mm	mm	mm	mm	mm	mm	mm	mm	mm	mm	mm	mm	mm		mm	mm	mm	mm
BH−122−A BH−124−B BH−126−B	60	11_{j6} 14_{j6} 14_{j6}	70	23 30 30	2,36 2,36 2,36	9,54 9,54 9,54	10 17 17	228 264 295	268 304 335	76,5	75	5,8	70	M4 M5 M5	4 5 5	8,5 11 11	12,5 16 16	14 19,8 19,8
BH−222−B BH−224−B BH−226−C/−E	80	14_{j6}	92	30	3	11,2	17	266 306 345	306 346 385	87	100	7	92	M5	5	11	16	19,8
BH−422−D BH−424−B/−D BH−426−B/−H	110	24_{j6}	115	50	3,5	12,5	27	315 369 422	365 419 472	99,5	130	9	115	M8	8	20	27	37

III.1.2 Radial-/axial forces at the shaft end

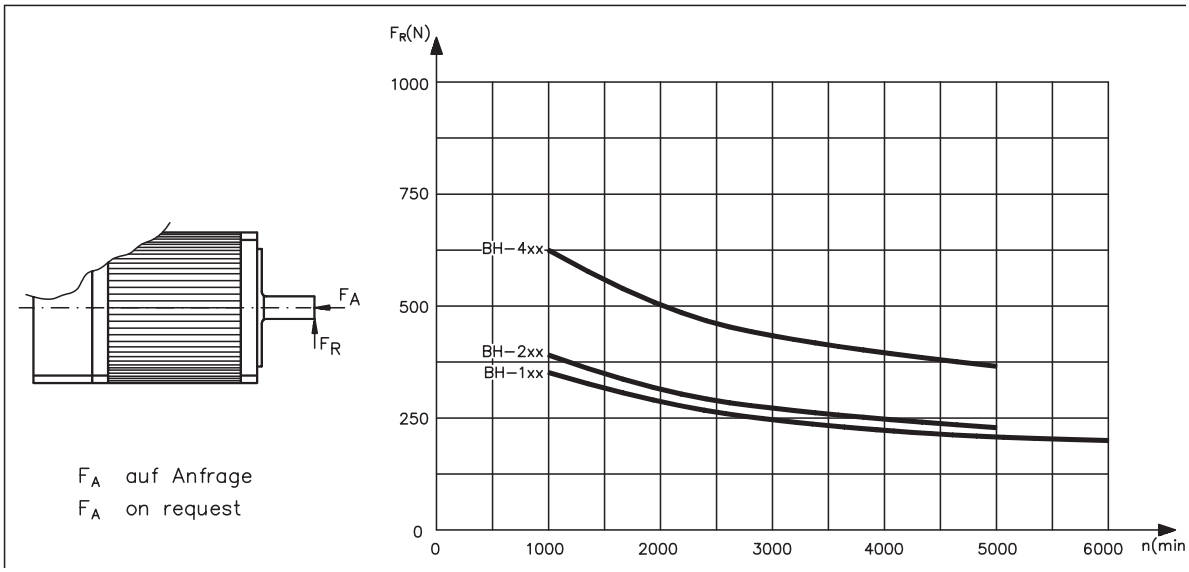

III.1.3 Wiring GOLDLINE™ BH-1xx..4xx

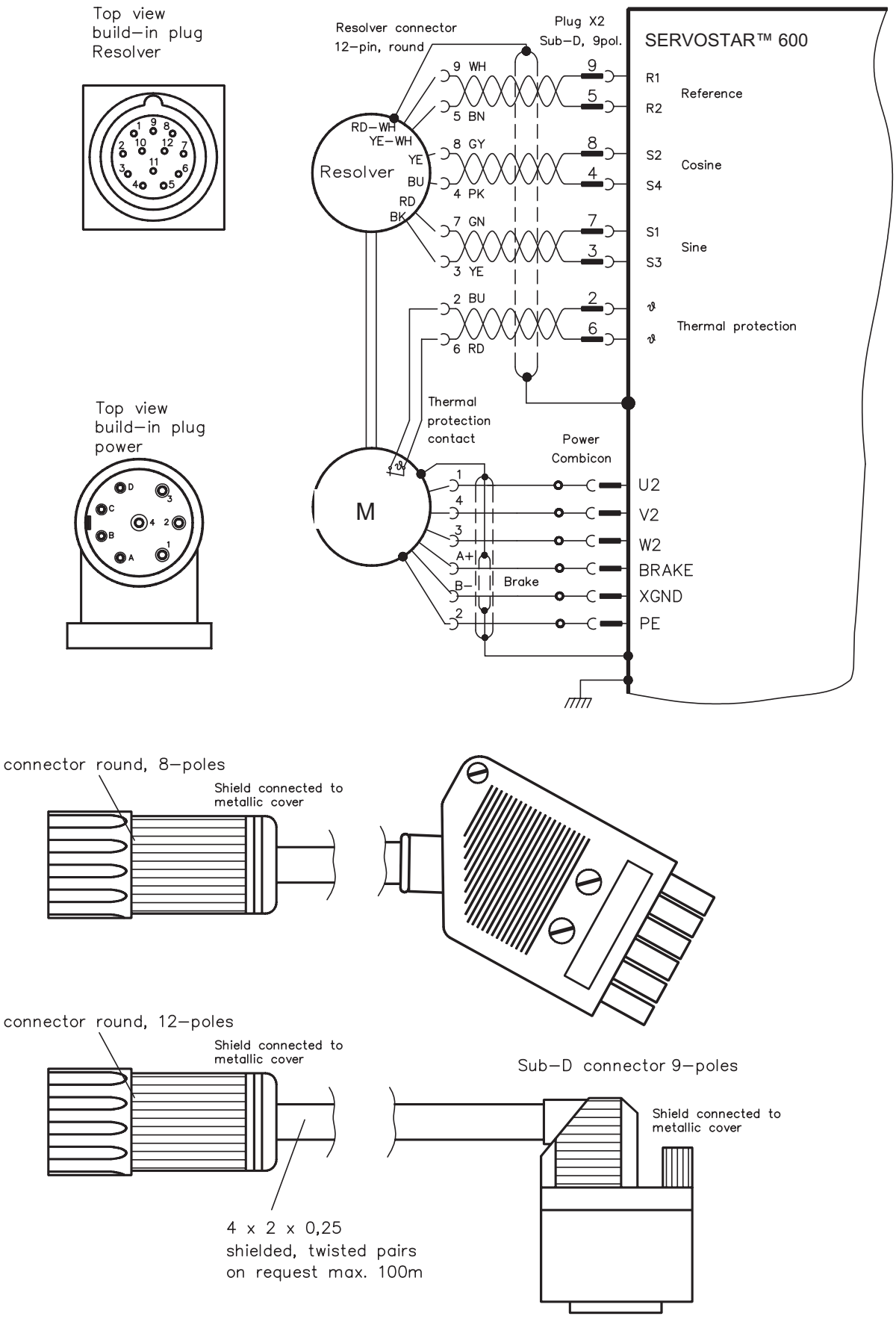

III.1.4 Performance curve GOLDLINE™ BH-122-A

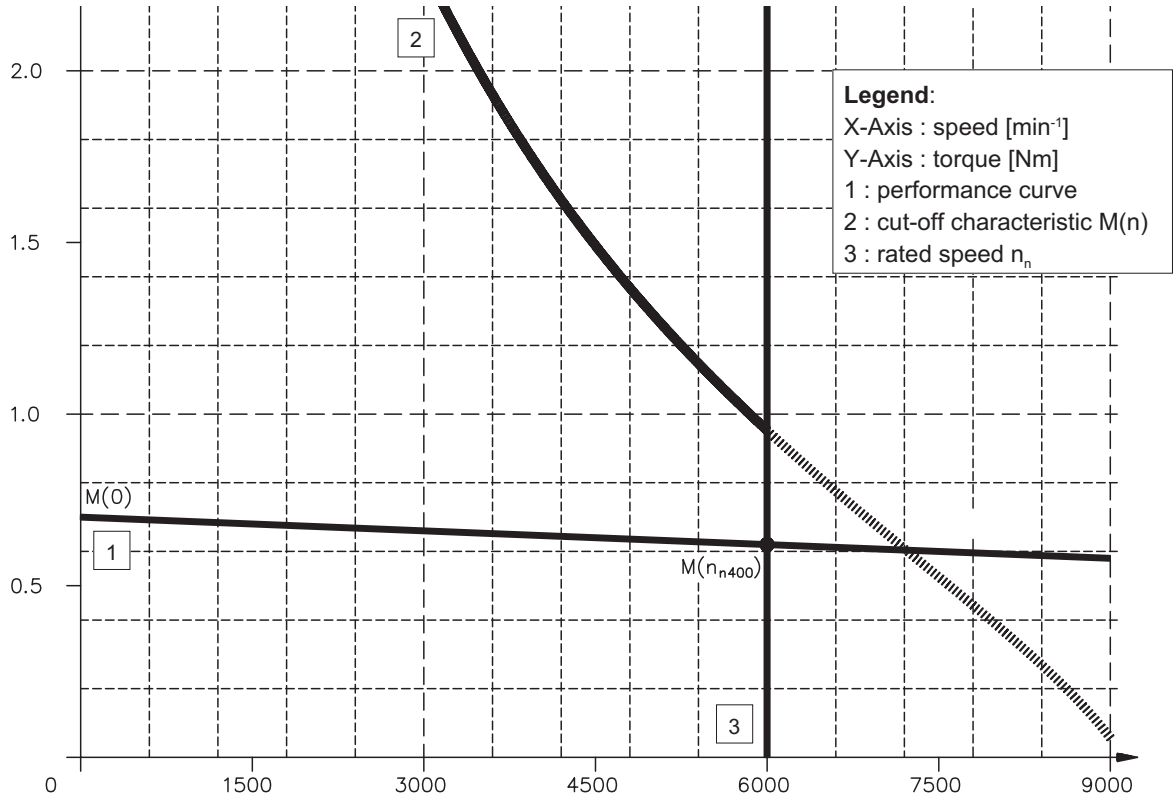

III.1.5 Performance curve GOLDLINE™ BH-124-B

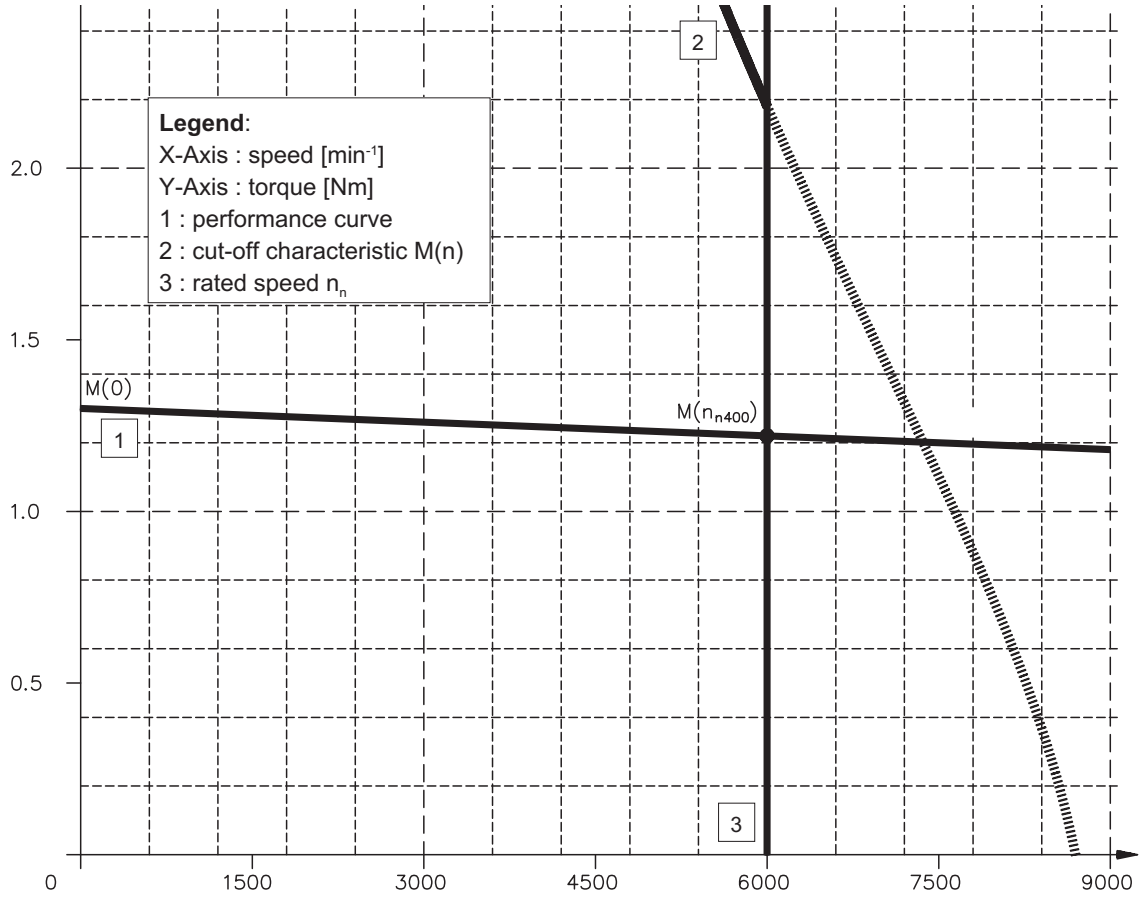

III.1.6 Performance curve GOLDLINE™ BH-126-B

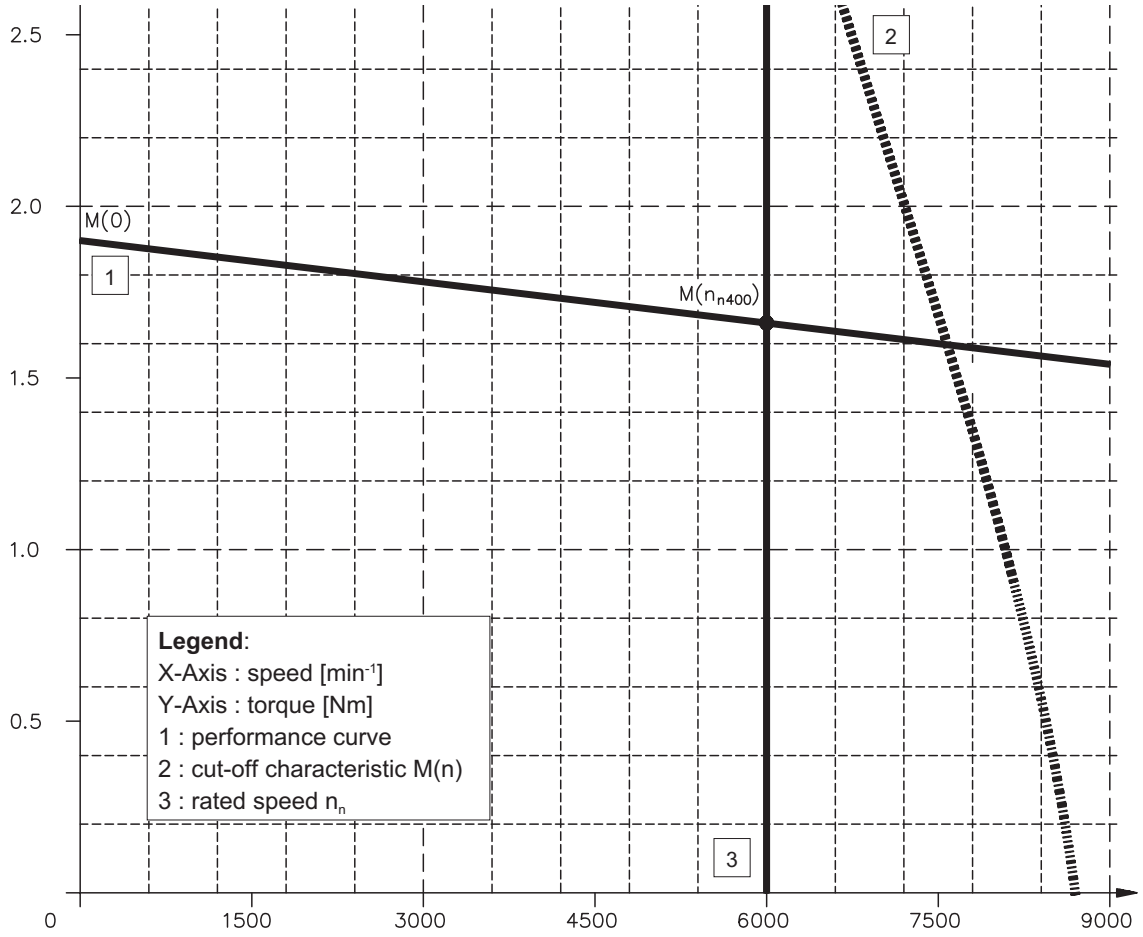

III.1.7 Performance curve GOLDLINE™ BH-222-B

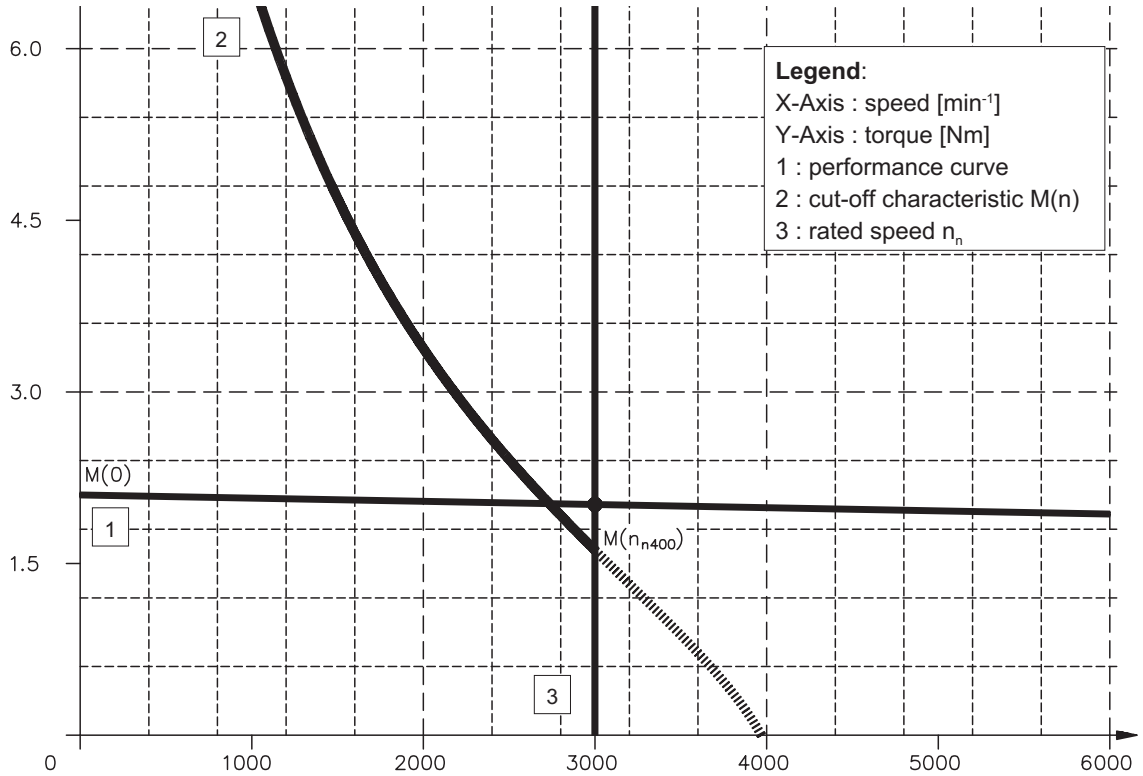

III.1.8 Performance curve GOLDLINE™ BH-224-B

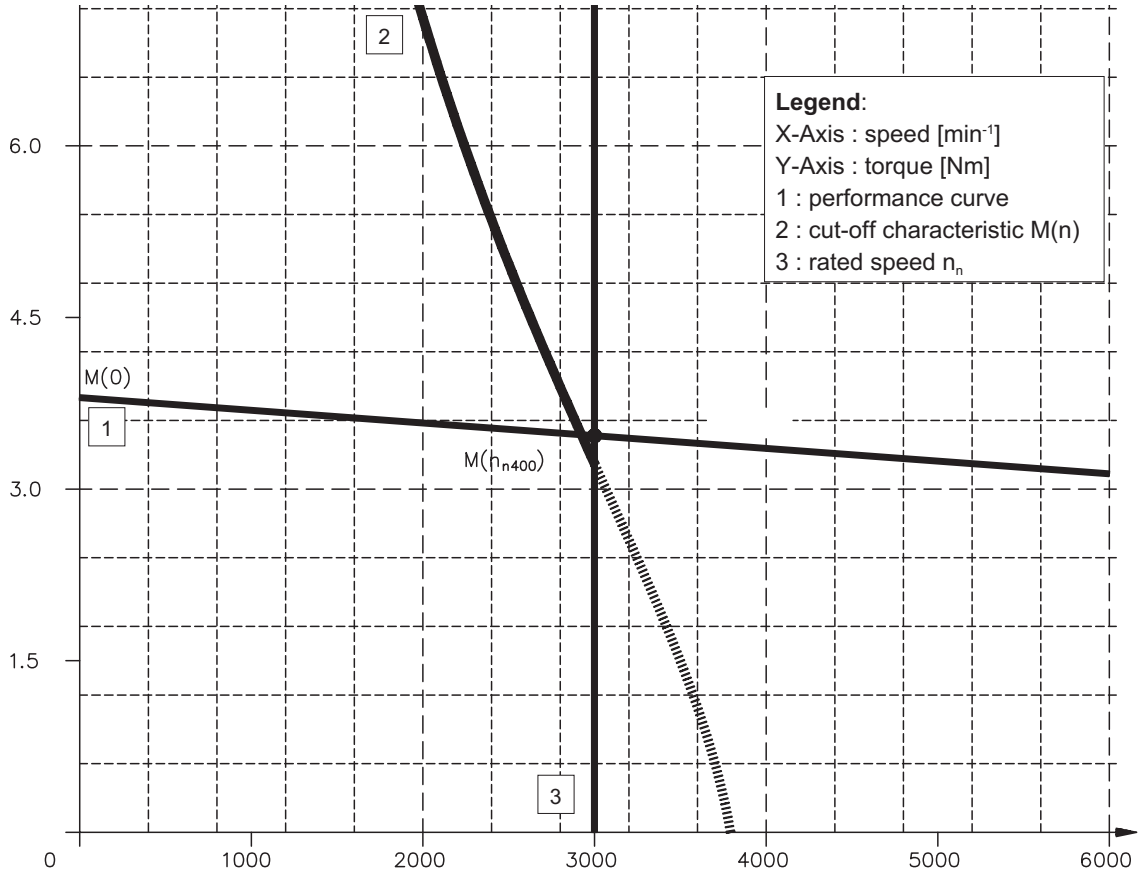

III.1.9 Performance curve GOLDLINE™ BH-226-C

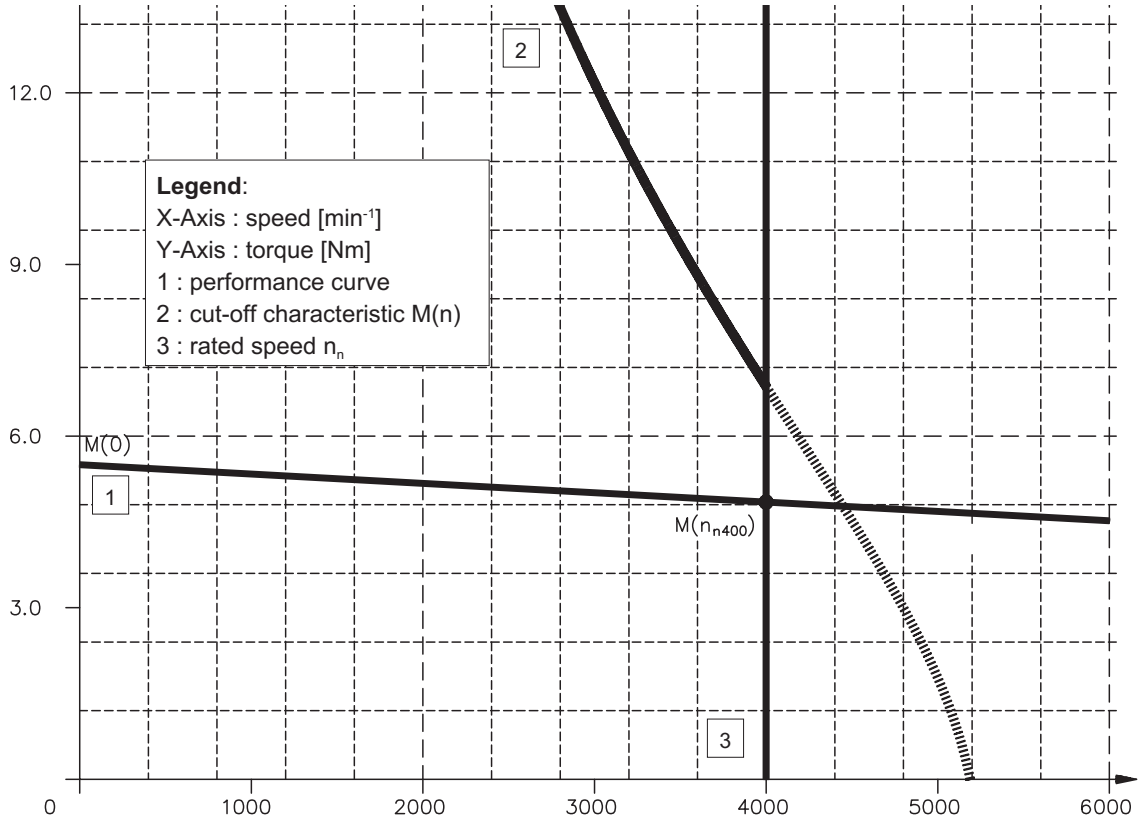

III.1.10 Performance curve GOLDLINE™ BH-226-E

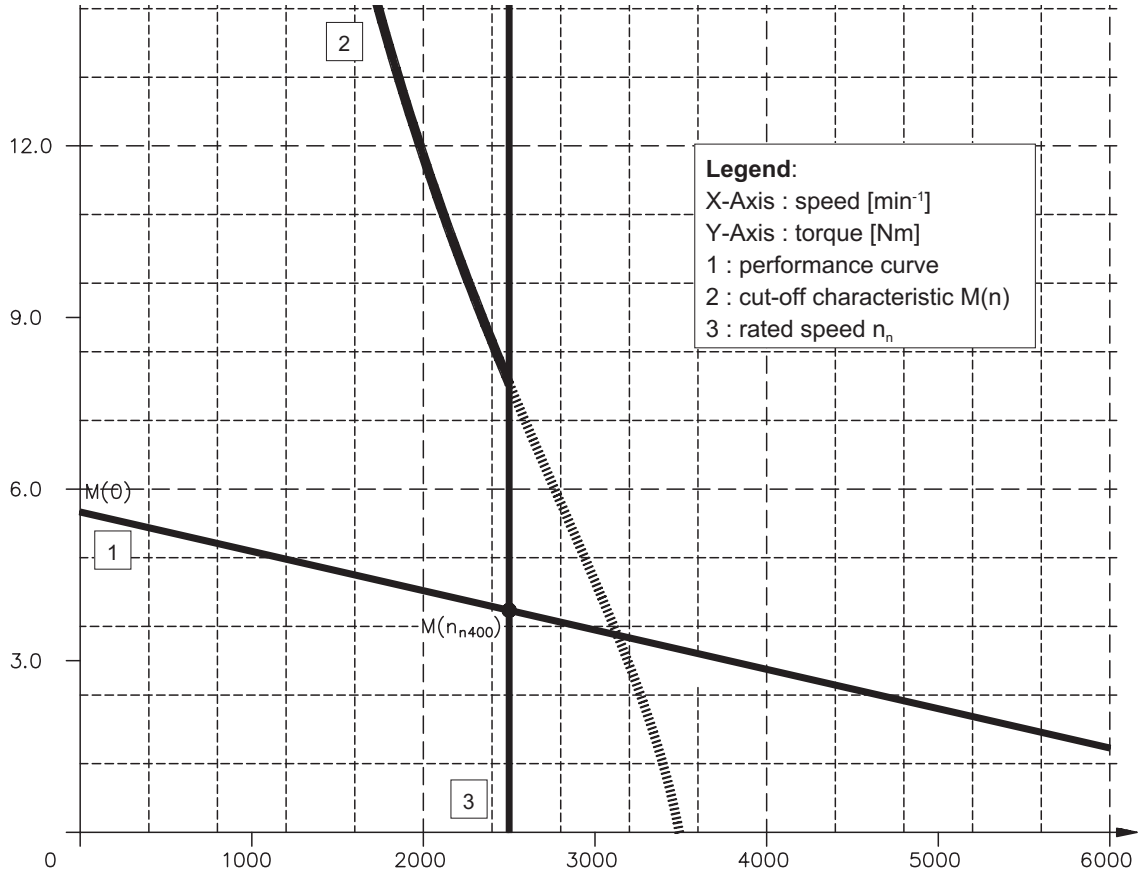

III.1.11 Performance curve GOLDLINE™ BH-422-D

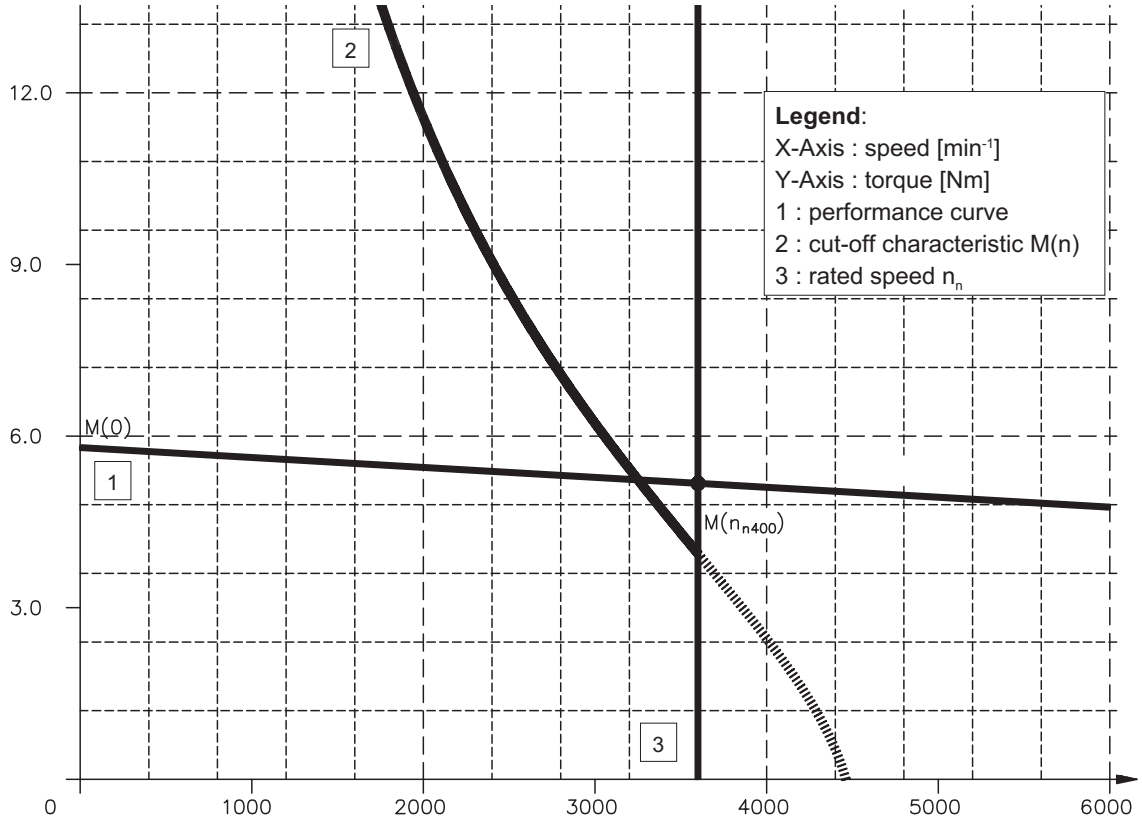

III.1.12 Performance curve GOLDLINE™ BH-424-B

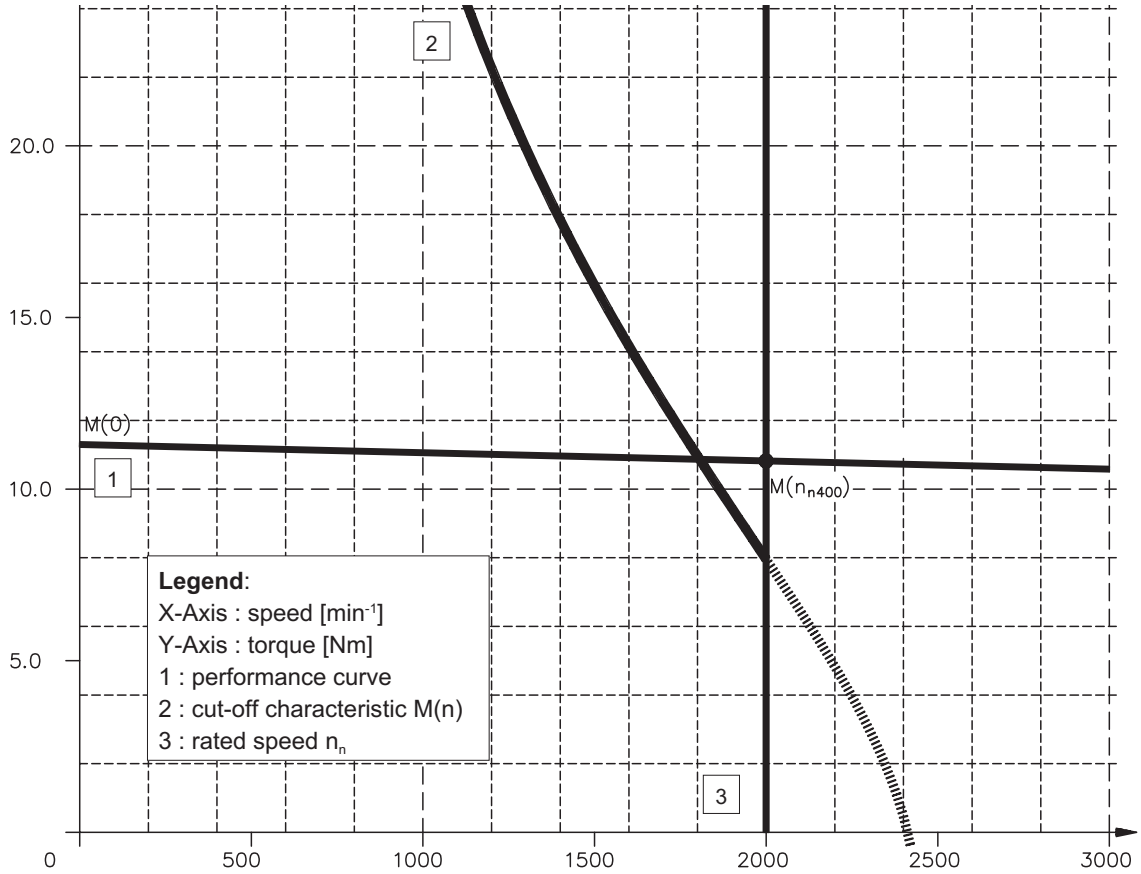

III.1.13 Performance curve GOLDLINE™ BH-424-D

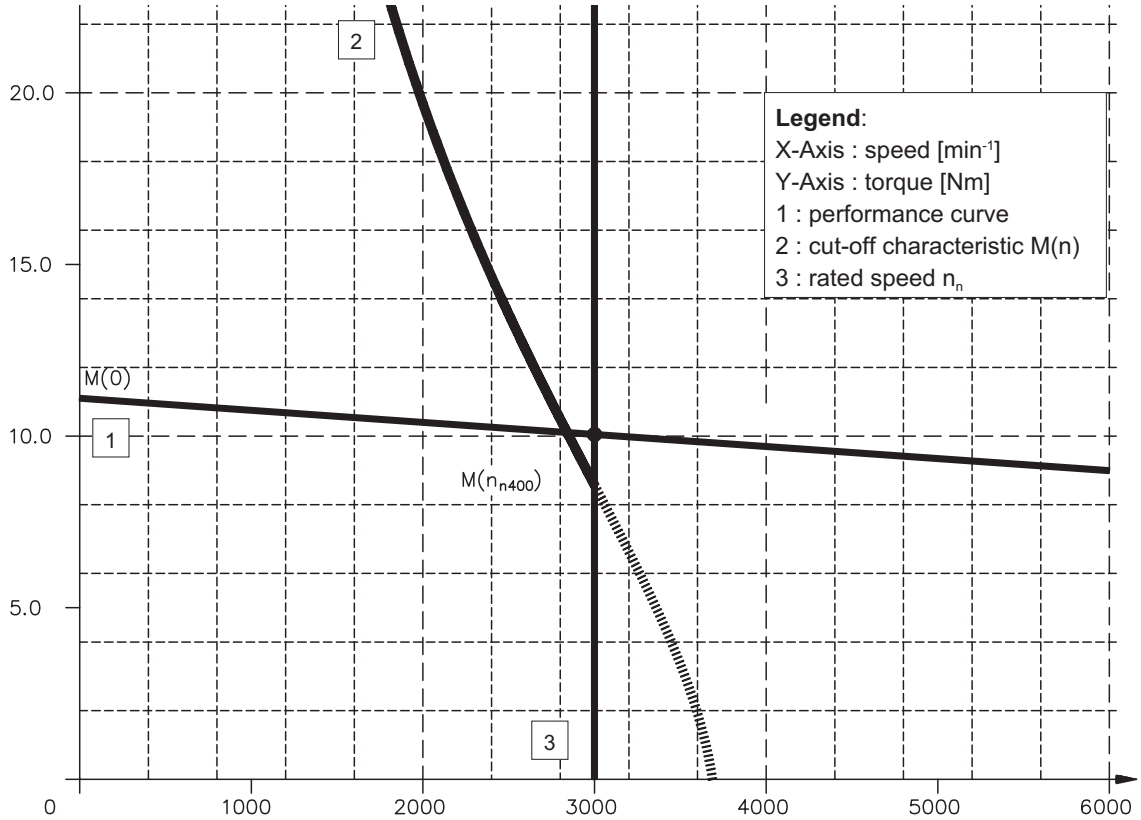

III.1.14 Performance curve GOLDLINE™ BH-426-B

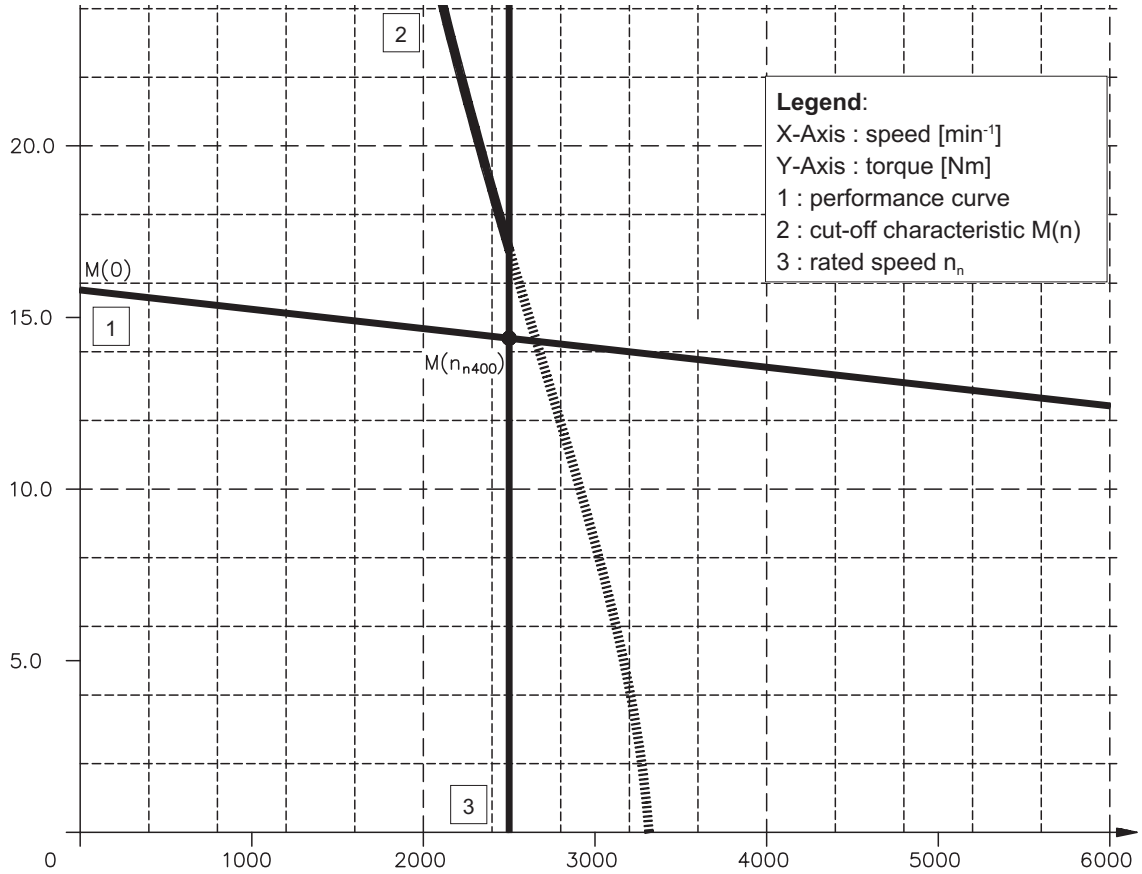

III.1.15 Performance curve GOLDLINE™ BH-426-H

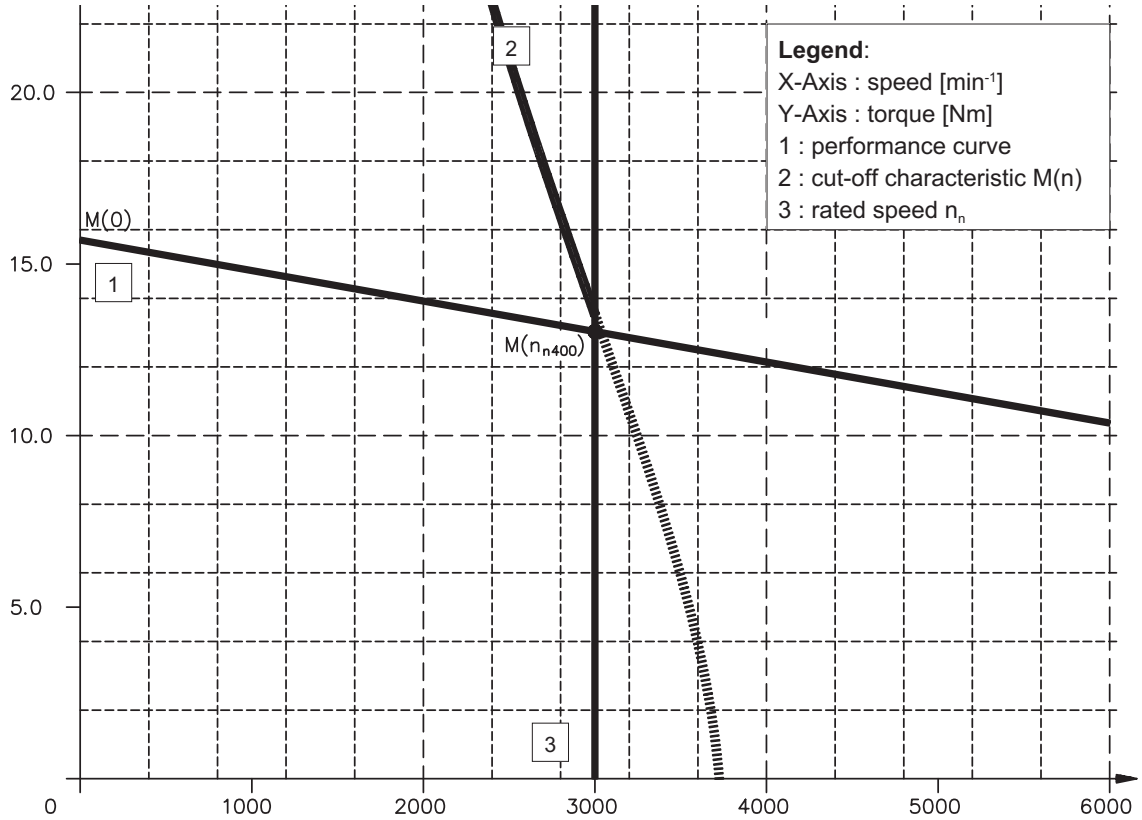

III.2 Motors with terminal box

III.2.1 Dimensions GOLDLINE™ BH6xx..8xx

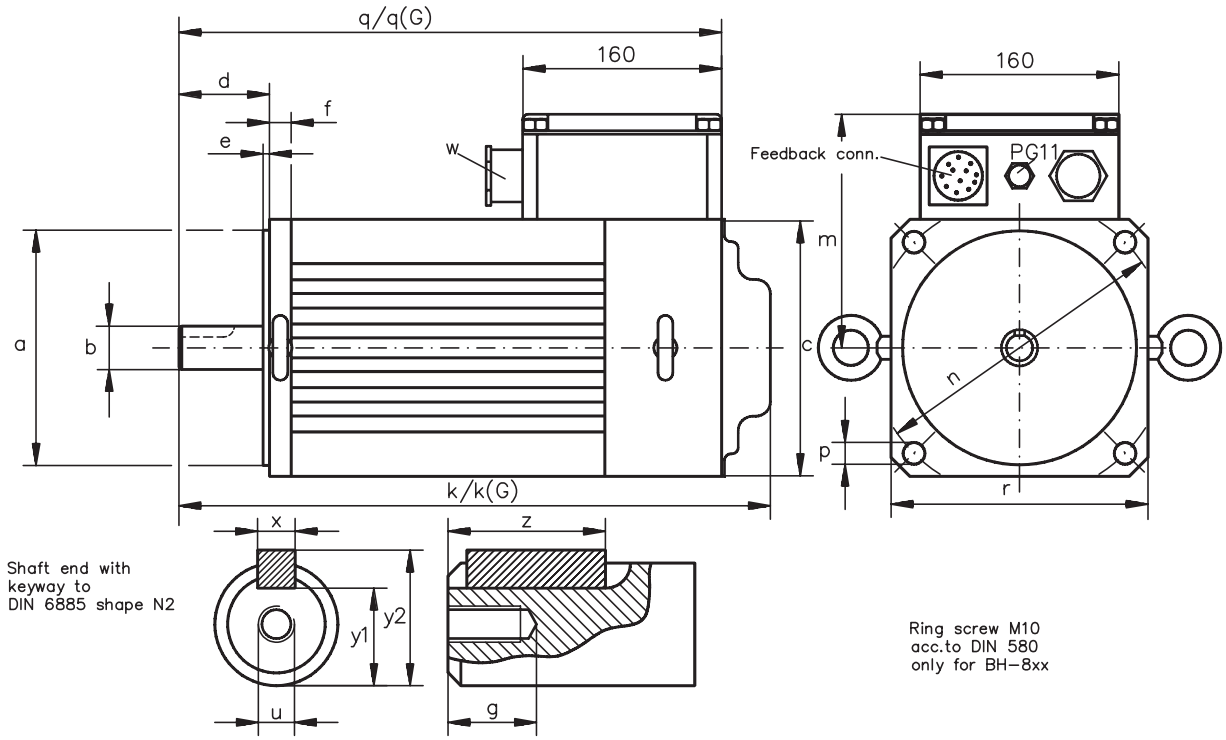

	a_{j6}	b	c	d	e	f	g	k	k(G)	m	n	p	q	q(G)	r	u	w	x	y1	y2	z
	mm	mm	mm	mm	mm	mm	mm	mm	mm	mm	mm	mm	mm	mm	mm		PG	mm	mm	mm	mm
BH−622−B	130	24_{j6}	142	50	3,5	18	27	350	407	161	165	11	332	389	142	M8	21	8	20	27	37
BH−624−C/−D		24_{j6}		50			27	418	475				400	457		M8		8	20	27	37
BH−626−E		32_{k6}		50			42	486	543				468	525		M12		10	27	35	39
BH−822−D	180	32_{j6}	190	58	4	19	42	418	475	185	215	14	400	457	190	M12	36	10	27	35	39
BH−824−A/−D		32_{k6}		58				508	565				490	547				10	27	35	39
BH−826−C/−D		48_{k6}		82				621	678				603	660				14	42,5	51,5	60
BH−828−B		48_{k6}		82				742	799				724	781				14	42,5	51,5	60

III.2.2 Radial-/axial forces at the shaft end

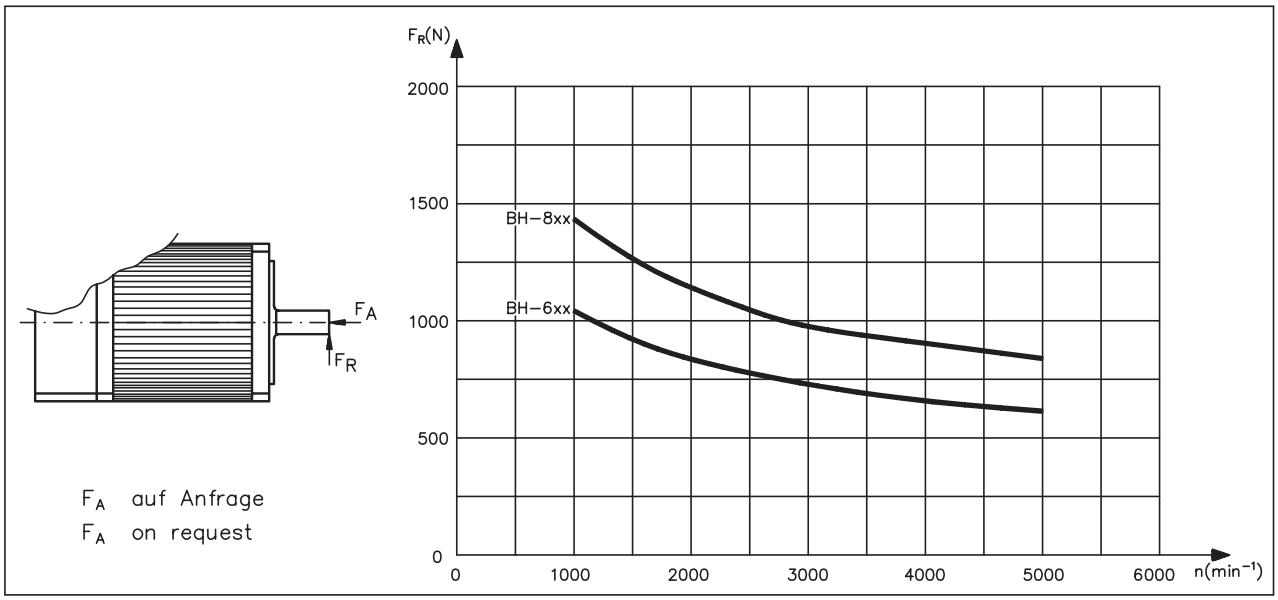

III.2.3 Wiring GOLDLINE™ BH-6xx..8xx

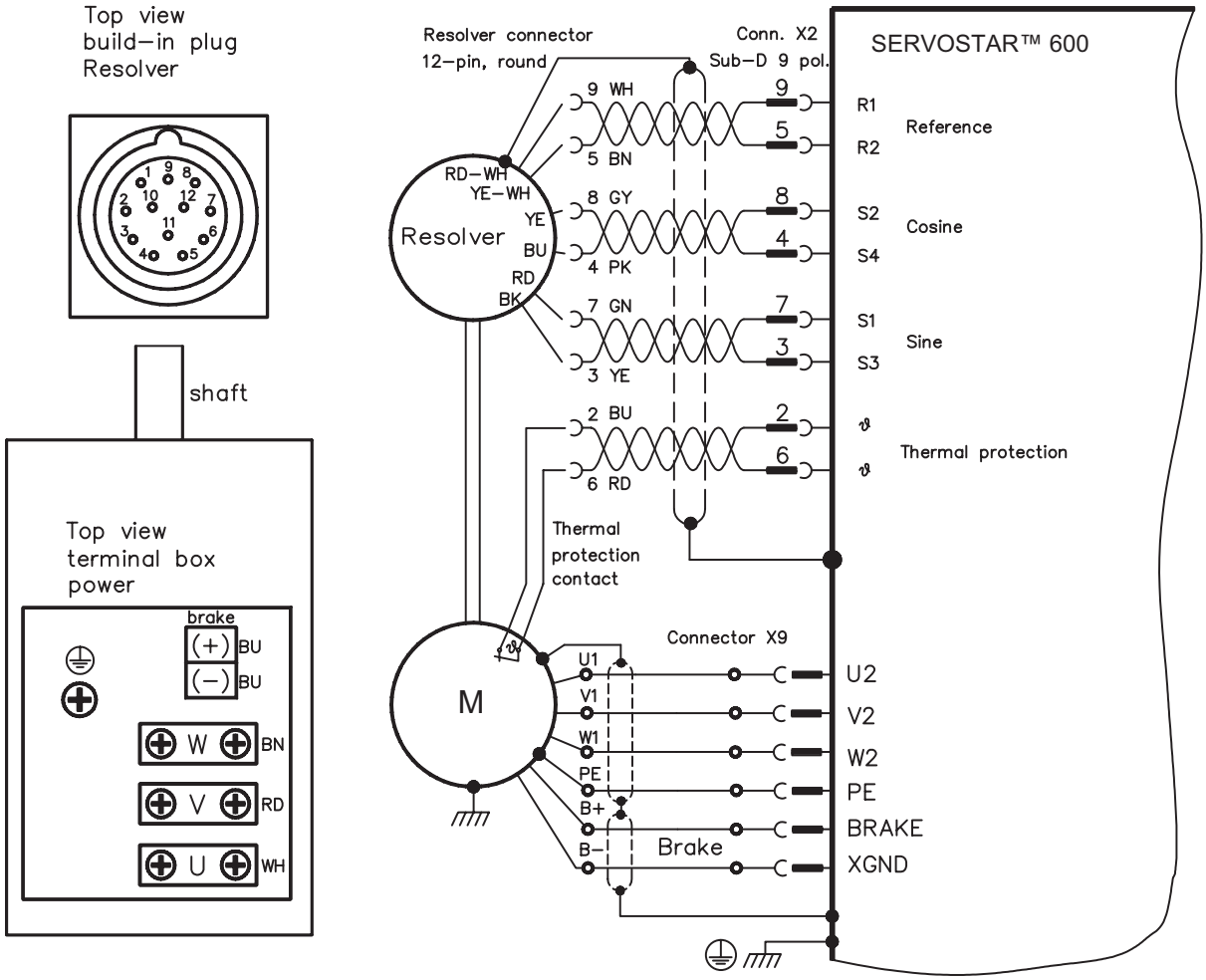

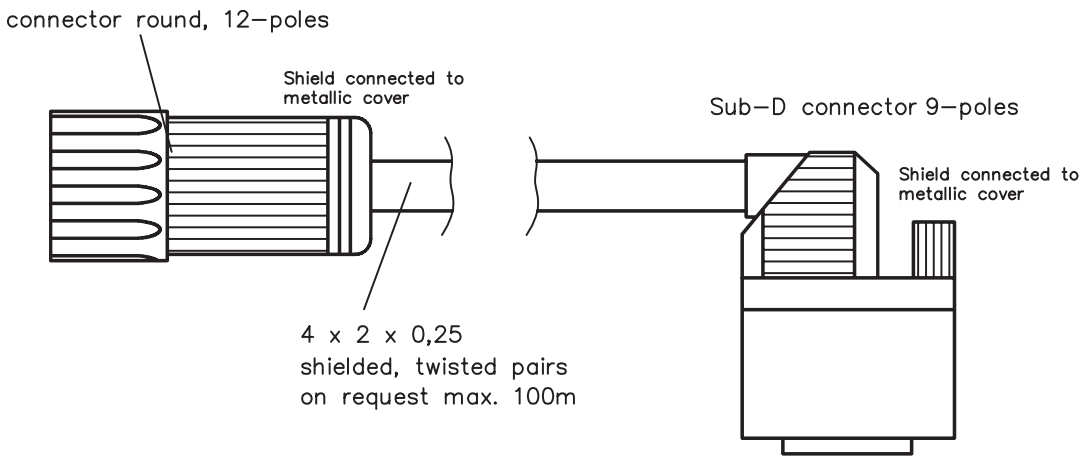

colour coding acc. to IEC 757

III.2.4 Performance curve GOLDLINE™ BH-622-B

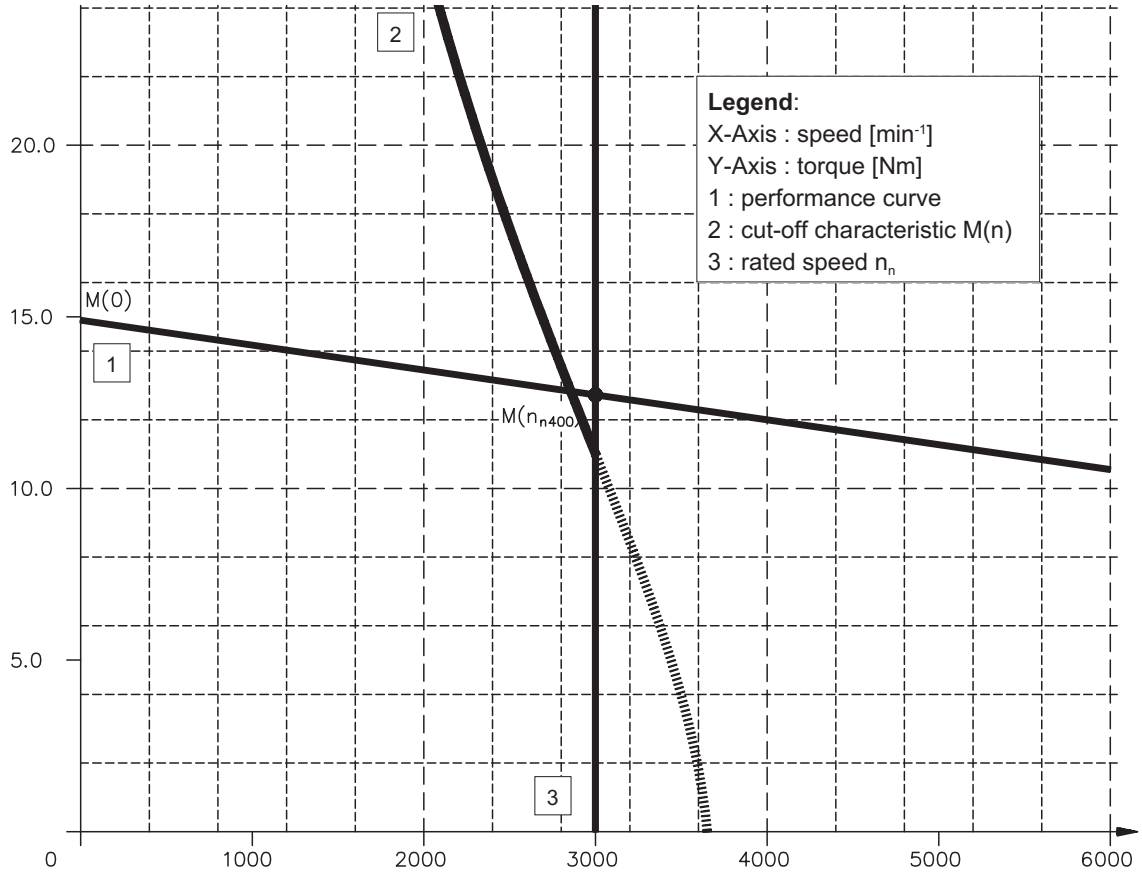

III.2.5 Performance curve GOLDLINE™ BH-624-C

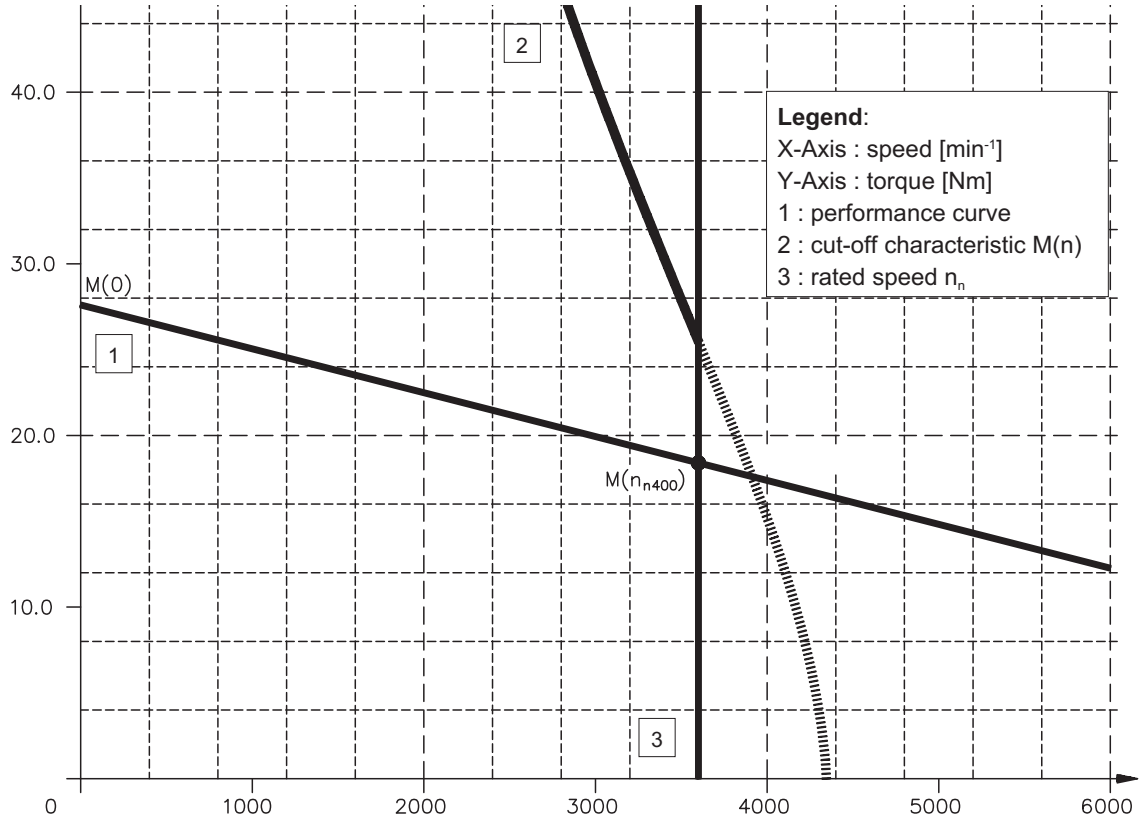

III.2.6 Performance curve GOLDLINE™ BH-624-D

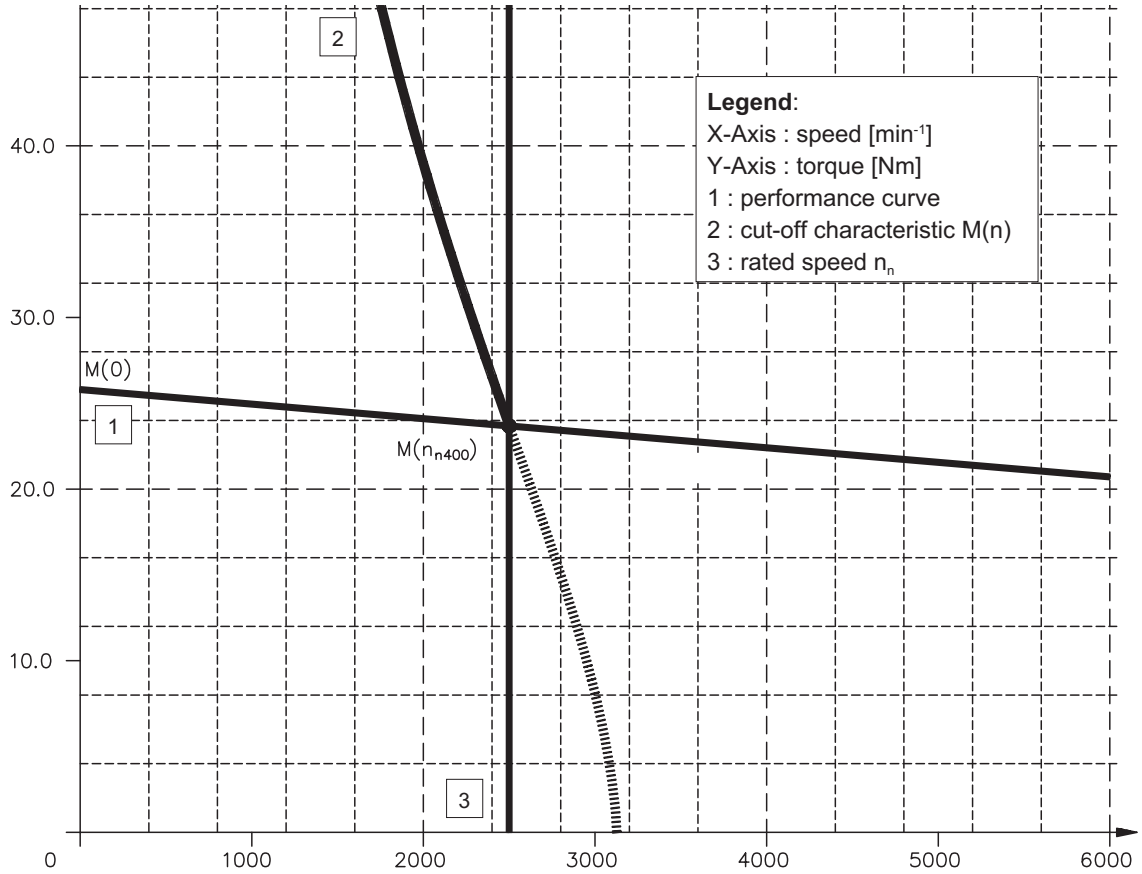

III.2.7 Performance curve GOLDLINE™ BH-626-E

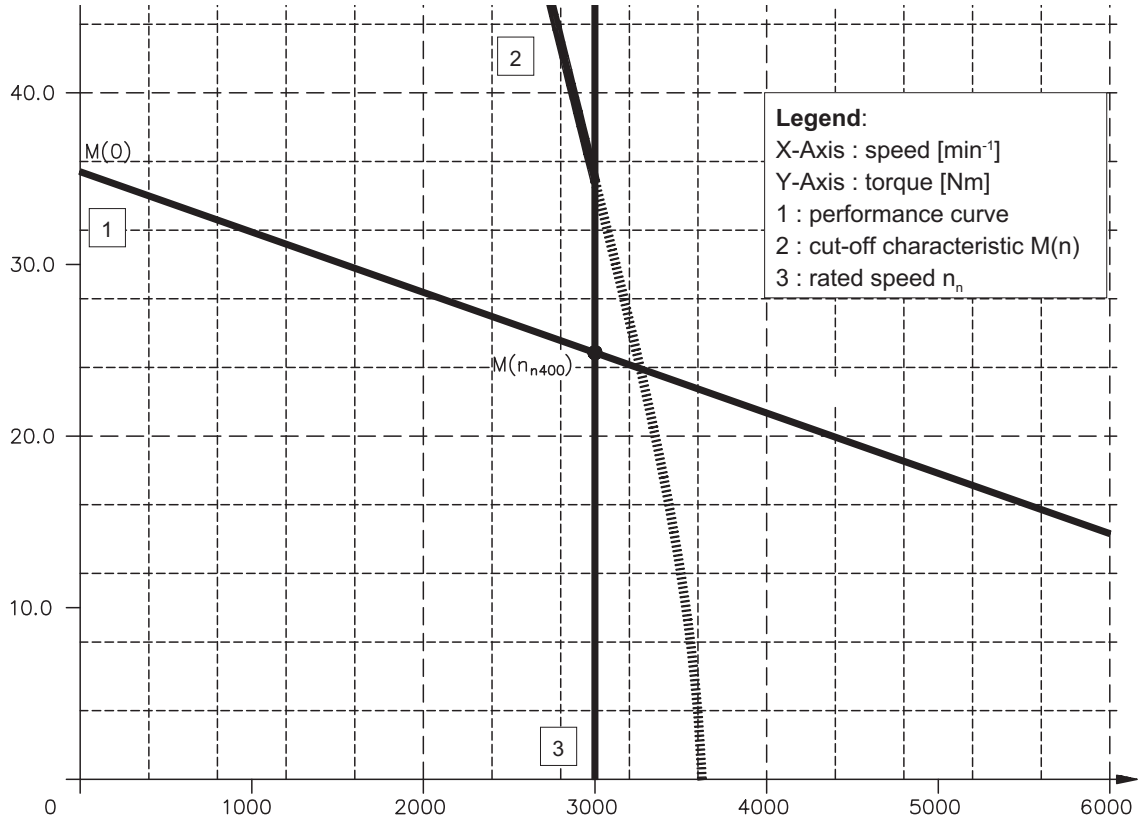

III.2.8 Performance curve GOLDLINE™ BH-822-D

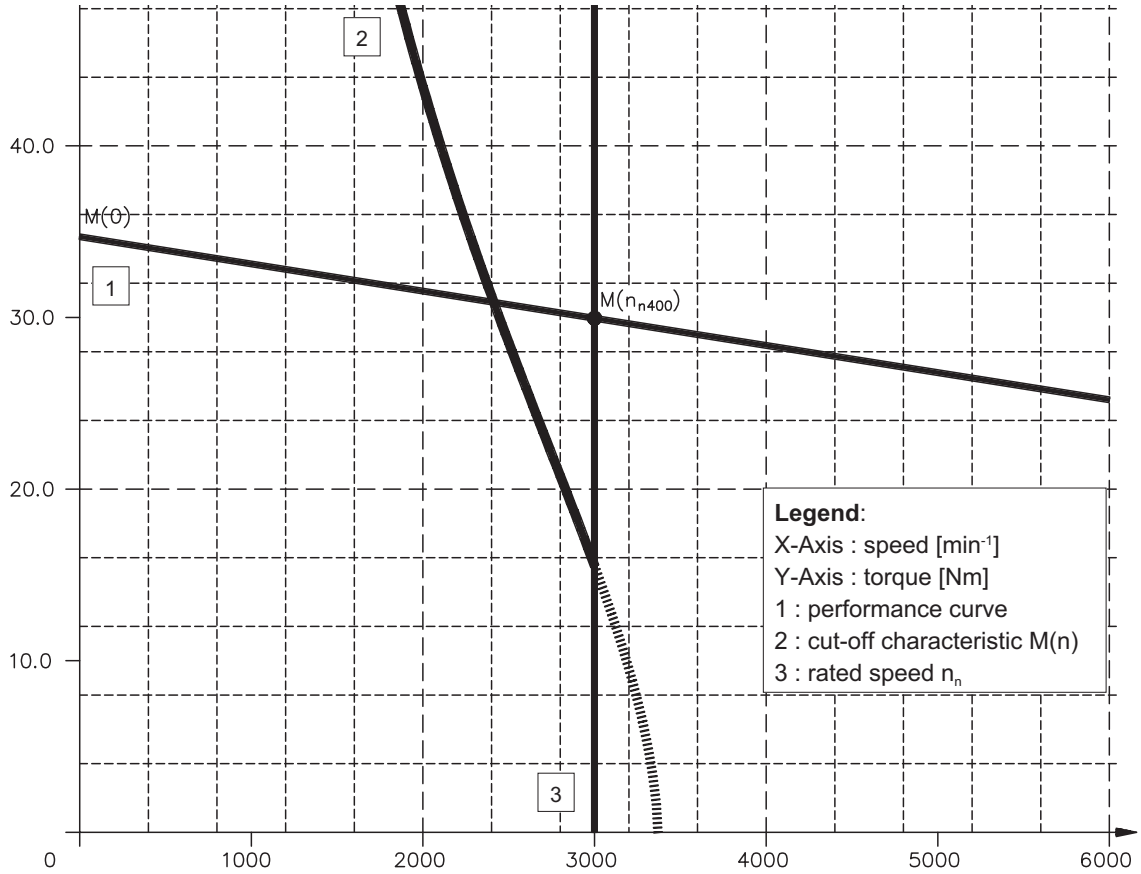

III.2.9 Performance curve GOLDLINE™ BH-824-A

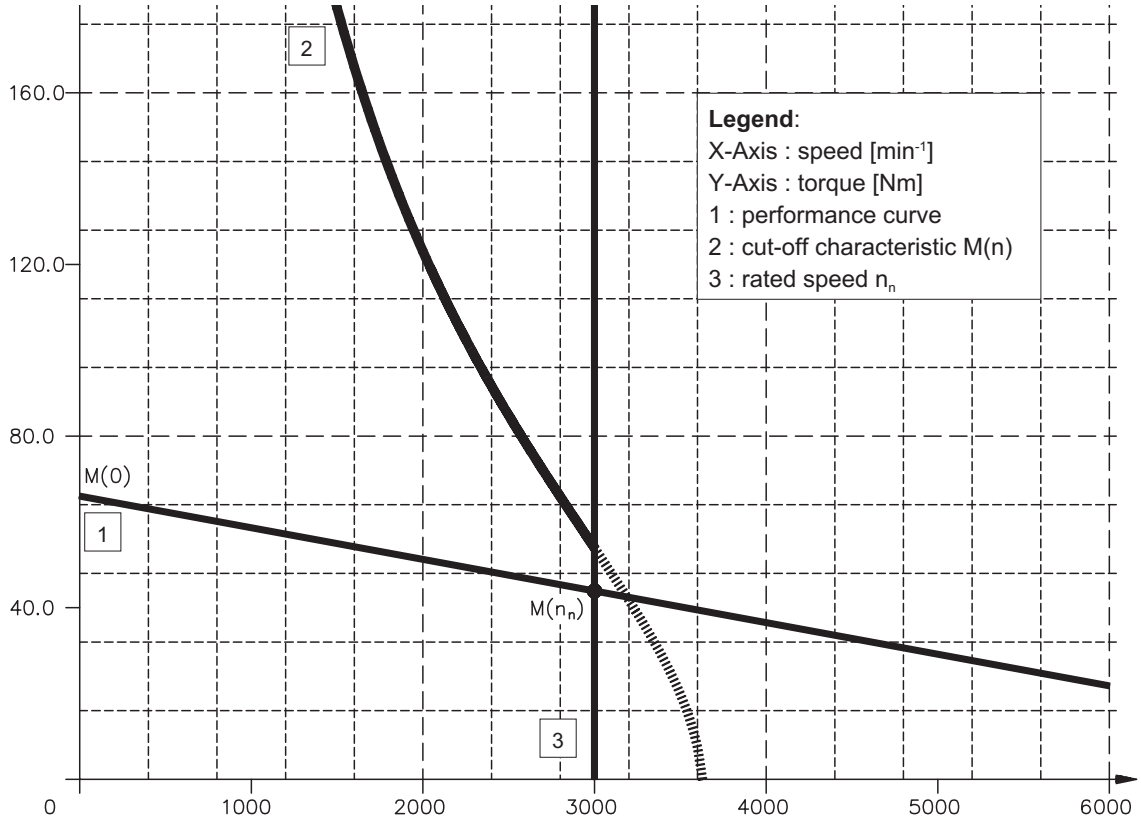

III.2.10 Performance curve GOLDLINE™ BH-824-D

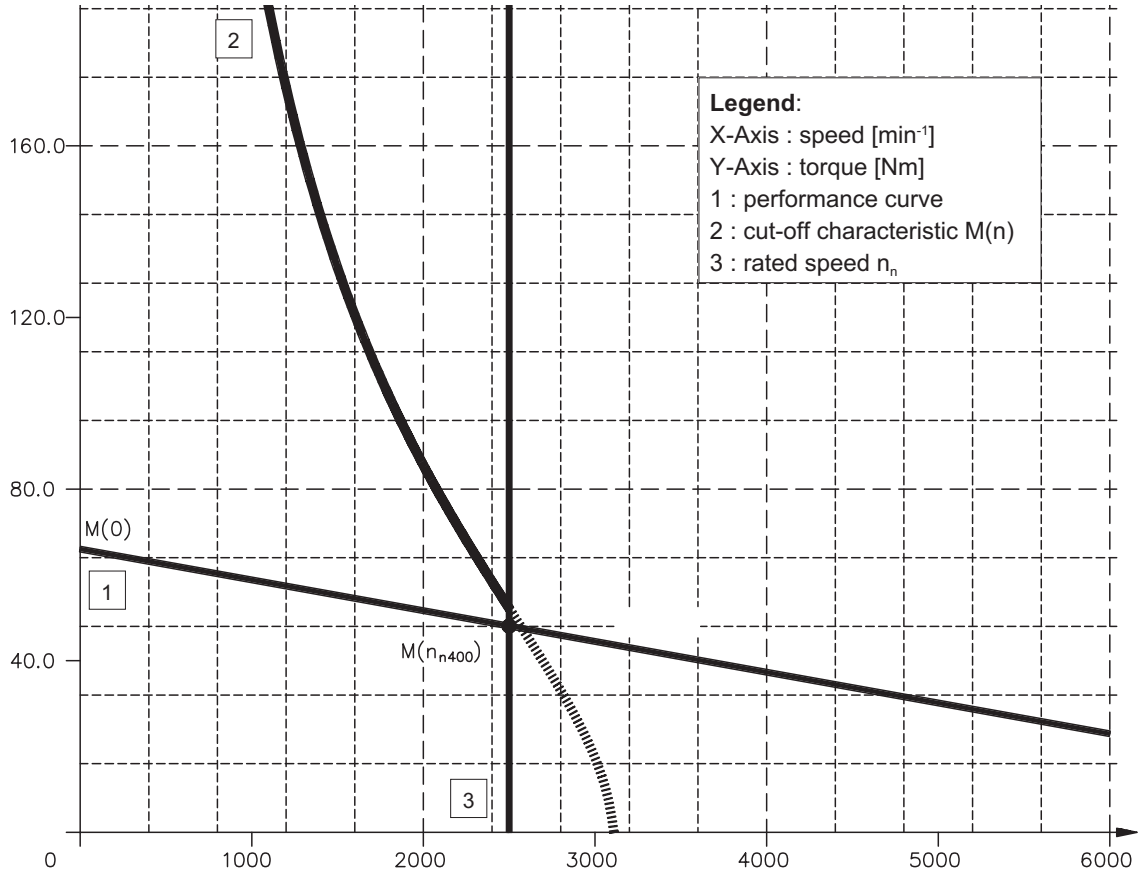

III.2.11 Performance curve GOLDLINE™ BH-826-C

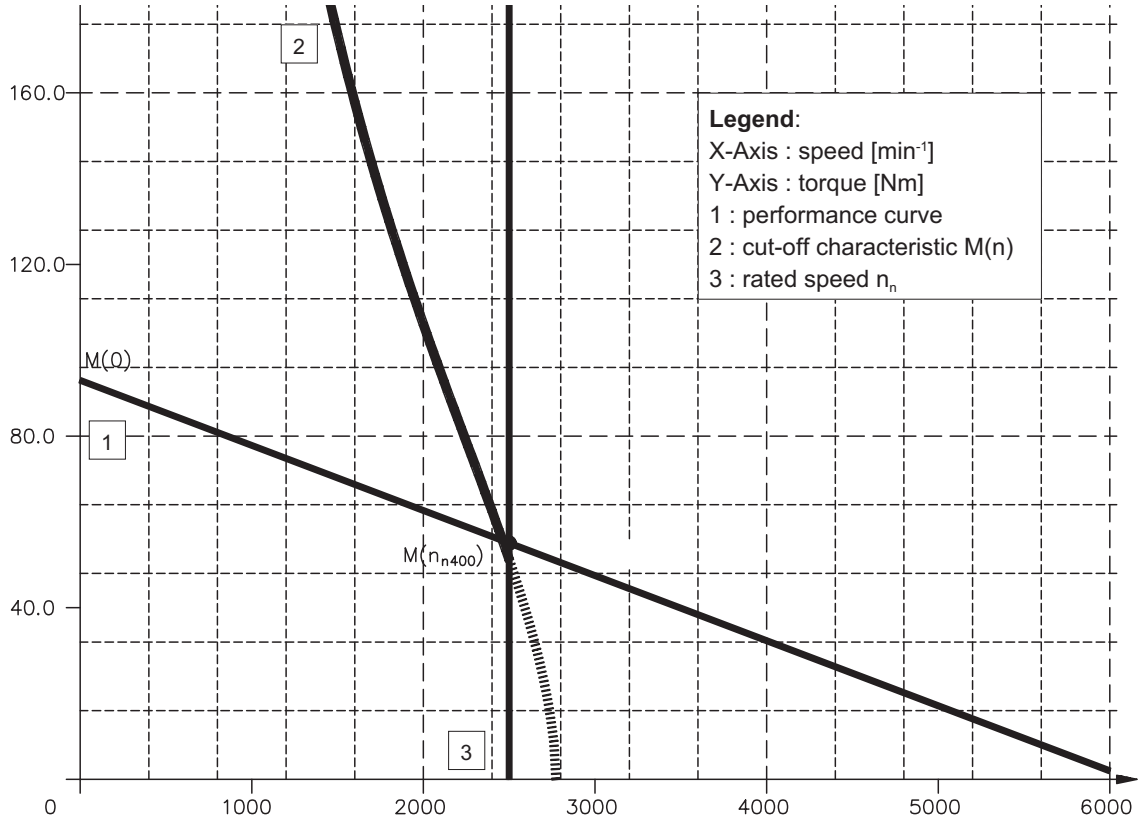

III.2.12 Performance curve GOLDLINE™ BH-826-D

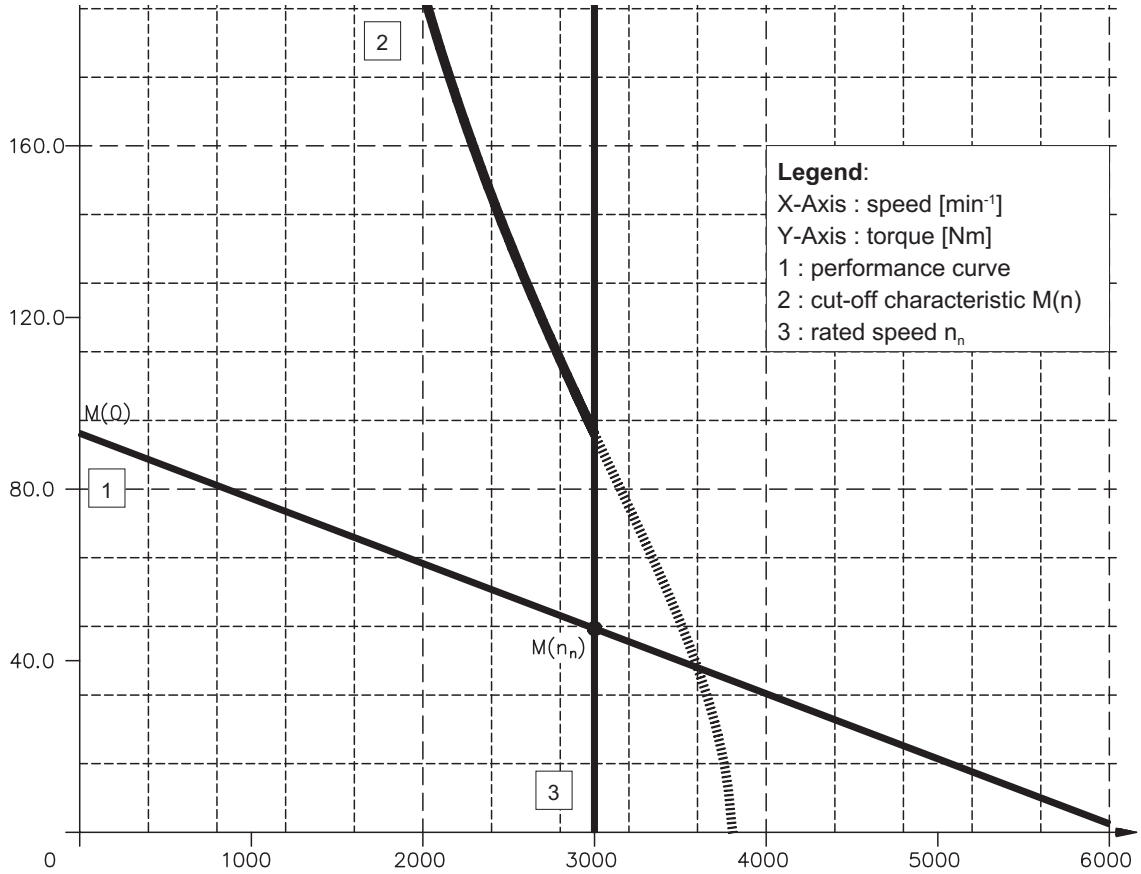

III.2.13 Performance curve GOLDLINE™ BH-828-B

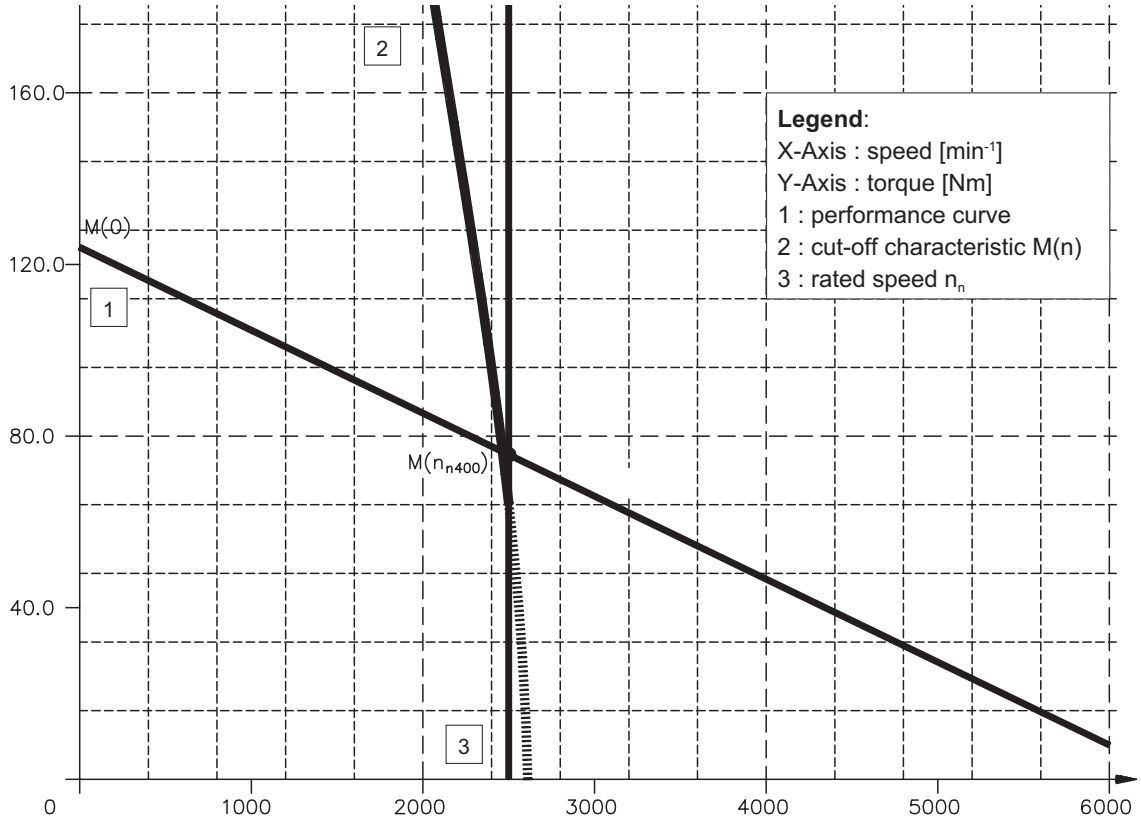

This page is deliberately left blank.

IV Appendix

IV.1 Delivery package, transport, storage, maintenance, disposal

Delivery package:
— Motor from the GOLDLINE™ BH series
— Technical description (documentation), 1 copy per delivery
— Motor package leaflet (short info)

Transport:
— Climate category 2K3 to EN 50178
Transport temperature —25...+70°C, max. 20K/hr change
Transport humidity rel. humidity 5% - 95%, no condensation
— only by qualified personnel
— only in the manufacturer's original recyclable packaging
— avoid shocks, especially on the shaft end
— if the packaging is damaged, check the motor for visible damage. Inform the carrier and, if appropriate, the manufacturer.

Packaging:

Motor type	Carton	Palett or skeleton box	Max.stackingheight
BH-1xx	X		4
BH-2xx	X		4
BH-4xx	X		3
BH-6xx	X		2
BH-8xx		X	1

Storage:
— Climate category 1K4 to EN 50178
Storage temperature —25...+55°C, max. variation 20K/hr.
Humidity rel. humidity 5% - 95%, no condensation
— only in the manufacturer's original recyclable packaging
— max. stacking height see table under Packaging
— Storage time unlimited

Maintenance:
— Only by qualified personnel
— The ball bearings have a grease packing which is adequate for 20,000 hours of operation under normal conditions. The bearings should be replaced after 20,000 hours of operation under rated conditions.
— Check the motor for bearing noise every 2500 operating hours, respectively each year. If any noises are heard, then the operation of the motor must stop, the bearings must be replaced.
— Opening the motor invalidates the warranty.

Cleaning:
— If the housing is dirty: clean with Isopropanol or similar.
do not immerse or spray

Disposal:
— The disposal should be carried out by a certified disposal company. Ask us for addresses.

IV.2 Fault-finding

The following table is to be seen as a “First Aid” box. There can be a large number of different reasons for a fault, depending on the particular conditions in your system. The fault causes described below are mostly those which directly influence the motor. Peculiarities which show up in the control loop behaviour can usually be traced back to an error in the parameterization of the servo amplifier. The documentation for the servo amplifier and the operator software provides information on these matters.

For multi-axis systems there may be further hidden reasons for faults.

Our applications department can give you further help with your problems.

Fault	Possible cause	Measures to remove the cause of the fault
Motor doesn’t rotate	— servo amplifier not enabled — Break in setpoint lead — Motor phases in wrong sequence — Brake not released — Drive is mechanically blocked	— Supply ENABLE signal — Check setpoint lead — Correct the phase sequence — Check brake controls — Check mechanism
Motor runs away	— Motor phases in wrong sequence — Wrong resolver adjustment	— Correct the phase sequence — Check the resolver offset and adjust it correctly
Motor oscillates	— Break in the shielding of the resolver cable — amplifier gain to high	— Replace resolver cable — use motor default values
Error message: brake	— Short-circuit in the supply voltage lead to the motor holding brake — Faulty motor holding brake	— Remove the short-circuit — Replace motor
Error message: output stage fault	— Motor cable has short-circuit or earth short — Motor has short-circuit or earth short	— Replace cable — Replace motor
Error message: resolver	— Resolver connector is not properly plugged in — Break in resolver cable, cable crushed or similar	— Check connector — Check cables
Error message: motor temperature	— Motor thermostat has switched — Loose resolver connector or break in resolver cable	— Wait until the motor has cooled down. Then investigate why the motor becomes so hot. — Check connector, replace resolver cable if necessary
Brake does not grip	— Required holding torque too high — Brake faulty — Motor shaft axially overloaded	— Check the dimensioning — Replace motor — Check the axial load, reduce it. Replace motor, since the bearings have been damaged

IV.3 Index

	Text	Page
A	Ambient temperature	10
	Assembly	19
	Axial force	11
	Axial forces	
	GOLDLINE BH 1xx..4xx	23
	GOLDLINE BH 6xx..8xx	31
B	Break response times	14
C	Commissioning	21
	Connection method	12
	Contents	3, 4
	Coupling	11
D	Delivery package	39
	Dimensions	
	GOLDLINE BH 1xx..4xx	23
	GOLDLINE BH 6xx..8xx	31
	Disposal	39
E	Earthing	19
F	Flange temperature	10
G	Ground symbol	18
H	Holding brake	12
I	Insulation material class	12
M	Maintenance	39
	Manufacturer declaration	7
	Motor lead	20
O	Options	13
P	Peak current	14
	Power derating	10
	Protection class	11
	Protective device	11
R	Radial force	11
	Radial forces	
	GOLDLINE BH 1xx..4xx	23
	GOLDLINE BH 6xx..8xx	31
	Rated current	14
	Rated torque	14
	Resolver	12
	Resolver lead	20
	Rotor moment of inertia	14
S	Safety notes	5
	Servo amplifier	10
	Shielding	19
	Site	19
	Standstill current	14
	Standstill torque	14
	Storage	39
	Storage humidity	39
	Storage temperature	39
	Storage time	39
	Style	11
	Symbols	5
T	Technical data	15
	Thermal time constant	14
	Thermostat	11
	Torque constant	14
	Transport	39
V	Ventilation	19
	Vibration class	12
	Voltage constant	14
W	Wiring	19
	GOLDLINE BH 1xx..4xx	24
	GOLDLINE BH 6xx..8xx	32

Vertrieb und Service / Sales and Service / Agence et Services

Bundesrepublik Deutschland /
Germany / Allemagne

Kollmorgen Seidel GmbH & Co. KG
Verkaufsniederlassung Nord
Wacholderstr. 40-42
40489 Düsseldorf
Tel.: +49(0)203 - 99 79 214
Fax: +49(0)203 - 99 79 182

Kollmorgen Seidel GmbH & Co. KG
Verkaufsniederlassung West
Lilienstraße 3
42719 Solingen
Tel.: +49(0)212 - 2 30 77 99
Fax: +49(0)212 - 2 30 77 97

Kollmorgen Seidel GmbH & Co. KG
Verkaufsniederlassung Mitte
Bussardweg 38
61118 Bad Vilbel
Tel.: +49(0)6101 - 55 866 00
Fax: +49(0)6101 - 55 866 06

Kollmorgen Seidel GmbH & Co. KG
Verkaufsniederlassung Süd-West
Lessingstr. 41
75015 Bretten
Tel.: +49(0)7252 - 97 39 040
Fax: +49(0)7252 - 97 39 055

Kollmorgen Seidel GmbH & Co. KG
Verkaufsniederlassung Süd-Ost
Landsbergerstr. 17
86947 Weil
Tel.: +49(0)8195 - 99 92-50
Fax: +49(0)8195 - 99 92-33

Servo-Dyn
Technik GmbH
Münzgasse 10
01067 Dresden
Tel.: +49(0)351 - 49 05 793
Fax: +49(0)351 - 49 05 794

Dänemark / Denmark / Danemark

DIGIMATIC ApS
Peder Skrams Vej 31A
5220 Odense SØ
Tel.: +45 - 70 20 16 70
Fax: +45 - 70 20 16 71

Finnland / Finland / Finlande

Drivematic OY
Hevosenkenkä 4
28430 Pori
Tel.: +358 - 20 11 23 - 111
Fax: +358 - 20 11 23 - 358

Frankreich / France / France

Kollmorgen Seidel GmbH & Co. KG
Parc technologique St.Jacques
2 rue Pierre et Marie Curie
54320 Maxéville
Tel.: +33(0)3 83 95 44 80
Fax: +33(0)3 83 95 44 81

Kollmorgen Seidel GmbH & Co. KG
216 Lotissement Les Peiffendes
Le Sonnant d'Uriage
38410 Uriage
Tel.: +33(0)4 76 59 22 30
Fax: +33(0)4 76 59 22 31

Großbritannien /
Great Britain / Royaume-Uni

Inmotion Technologies
Bridge Mills
Holmfirth
Huddersfield HD9 3TW
Tel : +44 (0) 14 84 68 83 25
Fax: +44 (0) 14 84 68 83 26

Heason Technologies Group
Claremont Lodge
Fontwell Avenue
Eastergate Chichester PO20 6RY
Tel.: +44(0)12 43 - 54 54 00
Fax: +44(0)12 43 - 54 45 90

Italien / Italy / Italie

Danaher Motion. s.r.l.
Via Brughetti ZI
20030 Bovisio Masciago (MI)
Tel. +39 (0) 0362 594260
Fax +39 (0) 0362 594263

Niederlande /
Netherlands / Pays-Bas

Dynamic Drives
Wattstraat 26f
2723 RC Zoetermeer
Tel.: +31(0)79 - 59 39 214
Fax: +31(0)79 - 59 39 840

Schweden / Sweden / Suéde

S D T AB
25467 Helsingborg
Tel.: +46(0)42 - 380 800
Fax: +46(0)42 - 380 813
Stockholm
12030 Stockholm
Tel.: +46(0)8 - 640 77 30
Fax: +46(0)8 - 641 09 15
Göteborg
42671 Västra Frölunda
Tel.: +46(0)31 - 69 62 60
Fax: +46(0)31 - 69 62 69

Schweiz / Switzerland / Suisse

Kollmorgen Seidel GmbH & Co. KG
Buhnrain 30
8052 Zürich
Tel.: +41(0)1 - 300 29 65
Fax: +41(0)1 - 300 29 66

Spanien / Spain / Espagne

BROTOMATIC S.L.
C/San Miguel de Acha, 2 Pab.3
01010 Vitoria (ALAVA)
Tel.: +34 945 - 24 94 11
Fax: +34 945 - 22 78 32

Systempartner / System partners / Partenaires du systéme

Bundesrepublik Deutschland /
Germany / Allemagne

Werner P. Hermes
Ingenieurbüro
Turmstr. 23
40750 Langenfeld
Tel.: +49(0)212 - 65 10 55
Fax :+49(0)212 - 65 10 57

EAT GmbH
Elektronische Antriebstechnik
Hanferstraße 23
79108 Freiburg
Tel: +49(0)761 - 13 03 50
Fax:+49(0)761 - 13 03 555

IBK Ingenieurbüro Keßler GmbH
Dachtmisser Str. 10
21394 Kirchgellersen
Tel: +49(0)4135 - 12 88
Fax:+49(0)4135 - 14 33

MACCON GmbH
Kühlbachstr. 9
81543 München
Tel: +49(0)89 - 65 12 20-0
Fax:+49(0)89 - 65 52 17

Großbritannien /
Great Britain / Royaume-Uni

Motor Technology Ltd.
Unit 1
Chadkirk Industrial Estate
Otterspool Road
Romiley, Stockport
Cheshire SK6 3LE
Tel.: +44(0)161 - 42 73 641
Fax : +44(0)161 - 42 71 306

Niederlande /
Netherlands / Pays-Bas

Kiwiet
Ingenieurbüro
Helenaveenseweg 35
5985 NK Panningen (Grashoek)
Tel.: +31(0)77 - 30 76 661
Fax: +31(0)77 - 30 76 646

Schweiz / Switzerland / Suisse

Bobry Servo Electronic AG
Zentralstr. 6
6030 Ebikon
Tel.: +41(0)41- 440 - 77 22
Fax : +41(0)41 - 440 - 69 43

Ungarn / Hungary / Hongrie

Q-TECH Mérnöki Szolgáltató Kft.
1161 Budapest
Batthyány u. 8.
Tel.: +36 (1) 405 - 33 38
Fax: +36 (1) 405 - 91 34

Italien / Italy / Italie

Servo Tecnica
Viale Lombardia 20
20095 Cusano Milanino (MI)
Tel.: +39 (0)02 - 66 42 01
Fax: +39 (0)02 - 66 40 10 20

M.C.A. s.r.l.
Via f. Turati 21
20016 Pero (Mi)
Tel.: +39(0)02 - 33 91 04 50
Fax: +39(0)02 - 33 90 85 8

Tschechien / Czech Rep. / Tchéquie

TG drives s.r.o
Jeneweinova 37
61700 Brno
Tel : 05 - 45 23 49 35
Fax: 05 - 45 23 47 35

Türkei / Turkey / Turquie

Robotek Otomasyon Teknolojileri
Ali Nihat Tarlan CAD.
Kartal Sk. No: 16/7
Üstbostancý ÝSTANBUL
Tel: +90 216 464 50 64 pbx
Fax: +90 216 464 50 72

Griechenland / Greece / Grèce

Alpha Motion
5 - 7 Alkamenoys Str.
104.39 Athens
Tel.: +30 1 82 27 470
Fax: +30 1 82 53 787

Australien / Australia / Australie

Motion Technologies PTY. Ltd.
1/65 Alexander Avenue
Taren Point NSW 2229
Sydney
Tel.: +61 (0)295 24 47 82
Fax: +61 (0)295 25 38 78

Kollmorgen Seidel GmbH & Co. KG

Hausanschrift

Wacholderstr. 40-42
D - 40489 Düsseldorf
Internet : http://www.danaher-motion.de

Postanschrift

Postfach 34 01 61
D-40440 Düsseldorf

Tel.: +49(0)203 - 99 79 - 0
Fax: +49(0)203 - 99 79 - 155
E-Mail: sales-eu@danaher-motion.de